LG TOTAL HVAC SOLUTION PROVIDER

ENGINEERING PRODUCT DATA BOOK

SINGLE A™

Heat Pump 50Hz/410A
5CSL0-01A

LG
Life's Good

P/No. : MFL67502810

SINGLE A™

Outdoor Unit

General Information

Outdoor units

Installation of Outdoor Units

SINGLE A™

Outdoor Unit

General Information

1. Model Names

2. Nomenclature

1. Model Names

1.1 Standard Model

◆ DC Inverter SINGLE A (1Ø)

DC Inverter	AUUW096D [UU09W ULD]	AUUW126D [UU12W ULD]	AUUW18GAE [UU18W UE4]
No. of connectable indoor units	1		
Total capacity index of connectable indoor units(kW)	2.5	3.5	5.0
Power supply	1Ø, 220 - 240V, 50Hz		
Chassis			

DC Inverter	AUUW24GAE [UU24W U44]	AUUW30GAE [UU30W U44]	AUUW366D2 [UU36W UO2]
No. of connectable indoor units	1		
Total capacity index of connectable indoor units(kW)	7.1	8.0	10.0
Power supply	1Ø, 220 - 240V, 50Hz		
Chassis			

DC Inverter Synchro	AUUW426D2 [UU42W U32]	AUUW486D2 [UU48W U32]	AUUW606D2 [UU60W U32]
No. of connectable indoor units	1 ~ 4		
Total capacity index of connectable indoor units(kW)	12.5	14.0	15.0
Power supply	1Ø, 220 - 240V, 50Hz		
Chassis			

1. Model Names

◆ DC Inverter SINGLE A (3Ø)

DC Inverter	AUUW368D2 [UU37W UO2]
No. of connectable indoor units	1
Total capacity index of connectable indoor units(kW)	10.0
Power supply	3Ø, 380 - 415V, 50Hz
Chassis	

DC Inverter	AUUW428D2 [UU43W U32]	AUUW488D2 [UU49W U32]	AUUW608D2 [UU61W U32]
No. of connectable indoor units	1 ~ 4		
Total capacity index of connectable indoor units(kW)	12.5	14.0	15.0
Power supply	3Ø, 380 - 415V, 50Hz		
Chassis			

DC Inverter	AUUW70LAE [UU70W U34]	AUUW85LAE [UU85W U74]
No. of connectable indoor units	1 ~ 4	
Total capacity index of connectable indoor units(kW)	19.0	23.0
Power supply	3Ø, 380 - 415V, 50Hz	
Chassis		

1. Model Names

1.2 Compact Model

◆ DC Inverter SINGLE A (1Ø)

Model Names	AUUW18GC0 [UU18WC UL0]	AUUW24GC0 [UU24WC UE0]
No. of connectable indoor units	1	
Nominal Capacity (kW)	4.7	6.8
Power supply	1Ø, 220 - 240V, 50Hz	
Chassis		

Model Names	AUUW30GC0 [UU30WC UE0]	AUUW36GC0 [UU36WC U40]
No. of connectable indoor units	1	
Nominal Capacity (kW)	7.5	9.5
Power supply	1Ø, 220 - 240V, 50Hz	
Chassis		

2. Nomenclature

2.1 Outdoor units(Global)

Model Name	AUU	W	24	6	D	2
No.	1	2	3	4	5	6

No.	Signification
1	**Indicates that this is a R410A SINGLE A outdoor unit**
2	**Model type** C : Cooling Only, H : Heat Pump, W: Inverter Heat Pump
3	**Capacity Code based on 'kBtu/h' units**
4	**Electrical rating** 6:1Ø,220V-240V,50 Hz 8:3Ø,380V-415V,50 Hz G: 1Ø, 220-240V, 50Hz / 1Ø, 220V, 60Hz L : 3Ø, 380-415V,50Hz / 3Ø, 380V, 50Hz
5	**Model Type** D, A : Standard C : Compact
6	**Model type**

2.2 Outdoor units(Europe)

Model Name	U	U	24	W		U4	2
No.	1	2	3	4	5	6	7

No.	Signification
1	**Model type** U : Universal model
2	**Type** U : Outdoor units
3	**Cooling / heating capacity (kBtu/h)**
4	**Model type** W : Inverter
5	**C** : Compact
6	**Outdoor unit chassis name**
7	**Serial number**

SINGLE A™

Outdoor Unit

Outdoor units

Standard Model

Compact Model

SINGLE A™

Outdoor Unit

Standard Model

DC Inverter SINGLE A (1Ø, 3Ø)
DC Inverter SINGLE A - Synchro (1Ø, 3Ø)

SINGLE A™

Outdoor Unit

DC Inverter SINGLE A (1Ø, 3Ø)

1. Power supply
2. List of functions
3. Specifications
4. Dimensions
5. Piping diagrams
6. Wiring diagrams
7. Capacity tables
8. Capacity coefficient factor
9. Operation range
10. Electric characteristics
11. Sound levels

1. Power supply

Type	Outdoor unit	Capacity (kW)	Circuit breaker capacity	Power supply
1Phase Inverter	AUUW096D[UU09W ULD]	2.5	15A	1Ø, 220-240V, 50Hz
	AUUW126D[UU12W ULD]	3.5		
	AUUW18GAE [UU18W UE4]	5.0	20A	
	AUUW24GAE [UU24W U44]	7.1	30A	
	AUUW30GAE [UU30W U44]	8.0		
	AUUW366D2 [UU36W UO2]	10.0	40A	
	AUUW426D2 [UU42W U32]	12.5		
	AUUW486D2 [UU48W U32]	14.0		
	AUUW606D2 [UU60W U32]	15.0		
3Phase Inverter	AUUW368D2 [UU37W UO2]	10.0	20A	3Ø, 380-415V, 50Hz
	AUUW428D2 [UU43W U32]	12.5		
	AUUW488D2 [UU49W U32]	14.0		
	AUUW608D2 [UU61W U32]	15.0		
	AUUW70LAE [UU70W U34]	19.0	30A	
	AUUW85LAE [UU85W U74]	23.0		

■ External wiring procedure

- The power supply work is needed only to the outdoor unit. The power supply to the indoor unit is conducted through the transmission wiring. Therefore, the power supply work can be carried out at just one place of the outdoor unit. It will contribute to simplify the work procedure and to save cost.
- Wiring cable size must comply with the applicable local and national code.

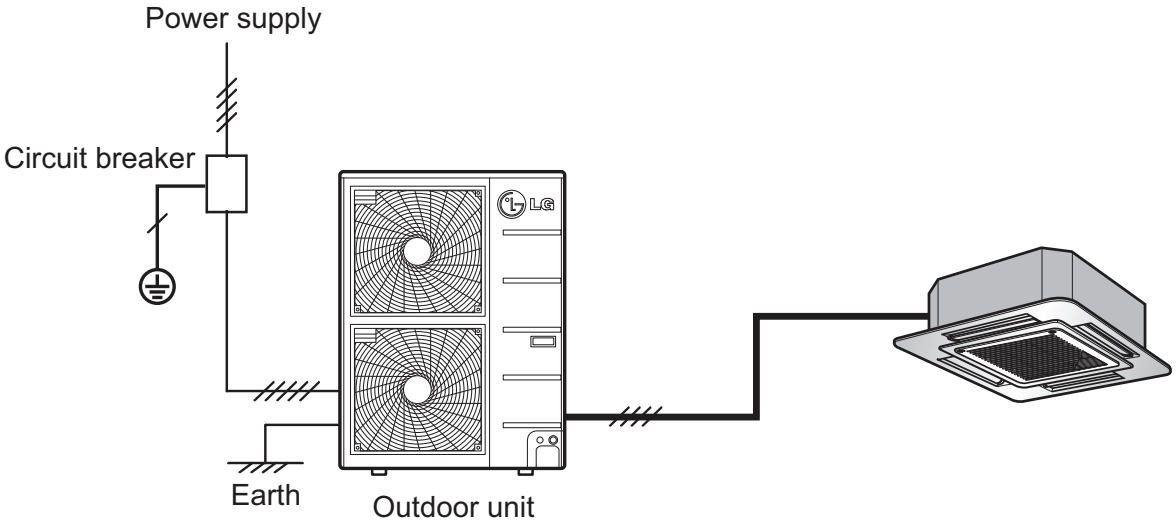

2. List of functions

◆ DC Inverter SINGLE A (1Ø)

Category	Functions	AUUW096D [UU09W ULD]	AUUW126D [UU12W ULD]	AUUW18GAE [UU18W UE4]
Reliability	Defrost / Deicing	O	O	O
	High pressure switch	X	X	X
	Low pressure switch	X	X	X
	Phase protection	X	X	X
	Restart delay (3-minutes)	O	O	O
	Self diagnosis	O	O	O
	Soft start	O	O	O
Convenience	Test function	X	X	O
	Night Silent Operation	X	X	O
	Peak Control	X	X	O
	Mode Lock	X	X	O
	Forced Cooling Operation (Outdoor Unit)	X	X	O
Network function	Network solution(LGAP)	X	X	O
ODU Dry Contact		X	X	X

Device		AUUW096D [UU09W ULD]	AUUW126D [UU12W ULD]	AUUW18GAE [UU18W UE4]
Central Controller	AC Ez (Simple Controller)	X	X	PQCSZ250S0
	AC Ez Touch	X	X	PACEZA000
	AC Smart IV	X	X	PACS4B000
	ACP IV	X	X	PACP4B000
	AC Manager IV	X	X	PACM4B000
	PI485	X	X	PMNFP14A0 / PMNFP14A1
Installation	Y branch	X	X	X
	Header branch	X	X	X
BNU (Building Network Unit)	LONWORKS Gateway	X	X	PLNWKB000
	BACnet Gateway	X	X	PQNFB17C0
Low Ambient Kit		X	X	O (Logical operation*)

Note

1. O : Applied X : Not applied
   Accessory model name : Installed at field, ordered and purchased separately by the corresponding model name, supplied with separate package.

- * : If outdoor side air temperature is low on cooling mode, outdoor unit controls the fan speed for continuous operation without the installation of additional accessory.

2. List of functions

Category	Functions	AUUW24GAE [UU24W U44]	AUUW30GAE [UU30W U44]	AUUW366D2 [UU36W UO2]
Reliability	Defrost / Deicing	O	O	O
	High pressure switch	X	X	X
	Low pressure switch	X	X	X
	Phase protection	X	X	X
	Restart delay (3-minutes)	O	O	O
	Self diagnosis	O	O	O
	Soft start	O	O	O
Convenience	Test function	O	O	O
	Night Silent Operation	O	O	O
	Peak Control	O	O	X
	Mode Lock	O	O	X
	Forced Cooling Operation (Outdoor Unit)	O	O	O
Network function	Network solution(LGAP)	O	O	O
ODU Dry Contact		X	X	O (On/off control)

Device		AUUW24GAE [UU24W U44]	AUUW30GAE [UU30W U44]	AUUW366D2 [UU36W UO2]
Central Controller	AC Ez (Simple Controller)	PQCSZ250S0	PQCSZ250S0	PQCSZ250S0
	AC Ez Touch	PACEZA000	PACEZA000	PACEZA000
	AC Smart IV	PACS4B000	PACS4B000	PACS4B000
	ACP IV	PACP4B000	PACP4B000	PACP4B000
	AC Manager IV	PACM4B000	PACM4B000	PACM4B000
	PI485	PMNFP14A0 / PMNFP14A1	PMNFP14A0 / PMNFP14A1	PMNFP14A0 / PMNFP14A1
Installation	Y branch	X	X	Accessory
	Header branch	X	X	Accessory
BNU (Building Network Unit)	LONWORKS Gateway	PLNWKB000	PLNWKB000	PLNWKB000
	BACnet Gateway	PQNFB17C0	PQNFB17C0	PQNFB17C0
Low Ambient Kit		O (Logical operation*)	O (Logical operation*)	O (Logical operation*)

Note

1. O : Applied X : Not applied
   Accessory model name : Installed at field, ordered and purchased separately by the corresponding model name, supplied with separate package.

- * : If outdoor side air temperature is low on cooling mode, outdoor unit controls the fan speed for continuous operation without the installation of additional accessory.

2. List of functions

Category	Functions	AUUW426D2 [UU42W U32]	AUUW486D2 [UU48W U32]	AUUW606D2 [UU60W U32]
Reliability	Defrost / Deicing	O	O	O
	High pressure switch	X	X	X
	Low pressure switch	X	X	X
	Phase protection	X	X	X
	Restart delay (3-minutes)	O	O	O
	Self diagnosis	O	O	O
	Soft start	O	O	O
Convenience	Test function	O	O	O
	Night Silent Operation	O	O	O
	Peak Control	X	X	X
	Mode Lock	X	X	X
	Forced Cooling Operation (Outdoor Unit)	O	O	O
Network function	Network solution(LGAP)	O	O	O
ODU Dry Contact		O (On/off control)	O (On/off control)	O (On/off control)

Device		AUUW426D2 [UU42W U32]	AUUW486D2 [UU48W U32]	AUUW606D2 [UU60W U32]
Central Controller	AC Ez (Simple Controller)	PQCSZ250S0	PQCSZ250S0	PQCSZ250S0
	AC Ez Touch	PACEZA000	PACEZA000	PACEZA000
	AC Smart IV	PACS4B000	PACS4B000	PACS4B000
	ACP IV	PACP4B000	PACP4B000	PACP4B000
	AC Manager IV	PACM4B000	PACM4B000	PACM4B000
	PI485	PMNFP14A0 / PMNFP14A1	PMNFP14A0 / PMNFP14A1	PMNFP14A0 / PMNFP14A1
Installation	Y branch	Accessory	Accessory	Accessory
	Header branch	Accessory	Accessory	Accessory
BNU (Building Network Unit)	LONWORKS Gateway	PLNWKB000	PLNWKB000	PLNWKB000
	BACnet Gateway	PQNFB17C0	PQNFB17C0	PQNFB17C0
Low Ambient Kit		O (Logical operation*)	O (Logical operation*)	O (Logical operation*)

Note

1. O : Applied X : Not applied
   Accessory model name : Installed at field, ordered and purchased separately by the corresponding model name, supplied with separate package.

- * : If outdoor side air temperature is low on cooling mode, outdoor unit controls the fan speed for continuous operation without the installation of additional accessory.

2. List of functions

◆ DC Inverter SINGLE A (3Ø)

Category	Functions	AUUW368D2 [UU37W UO2]	AUUW428D2 [UU43W U32]	AUUW488D2 [UU49W U32]
Reliability	Defrost / Deicing	O	O	O
	High pressure switch	X	X	X
	Low pressure switch	X	X	X
	Phase protection	O	O	O
	Restart delay (3-minutes)	O	O	O
	Self diagnosis	O	O	O
	Soft start	O	O	O
Convenience	Test function	O	O	O
	Night Silent Operation	O	O	O
	Peak Control	X	X	X
	Mode Lock	X	X	X
	Forced Cooling Operation (Outdoor Unit)	O	O	O
Network function	Network solution(LGAP)	O	O	O
ODU Dry Contact		O (On/off control)	O (On/off control)	O (On/off control)

Device		AUUW368D2 [UU37W UO2]	AUUW428D2 [UU43W U32]	AUUW488D2 [UU49W U32]
Central Controller	AC Ez (Simple Controller)	PQCSZ250S0	PQCSZ250S0	PQCSZ250S0
	AC Ez Touch	PACEZA000	PACEZA000	PACEZA000
	AC Smart IV	PACS4B000	PACS4B000	PACS4B000
	ACP IV	PACP4B000	PACP4B000	PACP4B000
	AC Manager IV	PACM4B000	PACM4B000	PACM4B000
	PI485	PMNFP14A0 / PMNFP14A1	PMNFP14A0 / PMNFP14A1	PMNFP14A0 / PMNFP14A1
Installation	Y branch	Accessory	Accessory	Accessory
	Header branch	Accessory	Accessory	Accessory
BNU (Building Network Unit)	LONWORKS Gateway	PLNWKB000	PLNWKB000	PLNWKB000
	BACnet Gateway	PQNFB17C0	PQNFB17C0	PQNFB17C0
Low Ambient Kit		O (Logical operation*)	O (Logical operation*)	O (Logical operation*)

Note

1. O : Applied X : Not applied
   Accessory model name : Installed at field, ordered and purchased separately by the corresponding model name, supplied with separate package.

- * : If outdoor side air temperature is low on cooling mode, outdoor unit controls the fan speed for continuous operation without the installation of additional accessory.

2. List of functions

Category	Functions	AUUW608D2 [UU61W U32]	AUUW70LAE [UU70W U34]	AUUW85LAE [UU85W U74]
Reliability	Defrost / Deicing	O	O	O
	High pressure switch	X	X	X
	Low pressure switch	X	X	X
	Phase protection	O	O	O
	Restart delay (3-minutes)	O	O	O
	Self diagnosis	O	O	O
	Soft start	O	O	O
Convenience	Test function	O	O	O
	Night Silent Operation	O	O	O
	Peak Control	X	O	O
	Mode Lock	X	O	O
	Forced Cooling Operation (Outdoor Unit)	O	O	O
Network function	Network solution(LGAP)	O	O	O
ODU Dry Contact		O (On/off control)	O (On/off control)	O (On/off control)

Device		AUUW608D2 [UU61W U32]	AUUW70LAE [UU70W U34]	AUUW85LAE [UU85W U74]
Central Controller	AC Ez (Simple Controller)	PQCSZ250S0	PQCSZ250S0	PQCSZ250S0
	AC Ez Touch	PACEZA000	PACEZA000	PACEZA000
	AC Smart IV	PACS4B000	PACS4B000	PACS4B000
	ACP IV	PACP4B000	PACP4B000	PACP4B000
	AC Manager IV	PACM4B000	PACM4B000	PACM4B000
	PI485	PMNFP14A0 / PMNFP14A1	PMNFP14A0 / PMNFP14A1	PMNFP14A0 / PMNFP14A1
Installation	Y branch	Accessory	Accessory	Accessory
	Header branch	Accessory	Accessory	Accessory
BNU (Building Network Unit)	LONWORKS Gateway	PLNWKB000	PLNWKB000	PLNWKB000
	BACnet Gateway	PQNFB17C0	PQNFB17C0	PQNFB17C0
Low Ambient Kit		O (Logical operation*)	O (Logical operation*)	O (Logical operation*)

Note

1. O : Applied X : Not applied
   Accessory model name : Installed at field, ordered and purchased separately by the corresponding model name, supplied with separate package.

- * : If outdoor side air temperature is low on cooling mode, outdoor unit controls the fan speed for continuous operation without the installation of additional accessory.

3. Specifications

◆ DC Inverter SINGLE A (1Ø)

Combination	Outdoor unit			AUUW096D [UU09W ULD]	AUUW096D [UU09W ULD]
	Indoor unit			ATNH09GRLE2 [CT09 NR2]	ABNH09GL1A2 [CB09L N12]
Capacity	Cooling	Min.~Rated~Max.	kW	1.00 ~ 2.50 ~ 2.75	1.10 ~ 2.50 ~ 3.20
		Min.~Rated~Max.	Btu/h	3,400 ~ 8,500 ~ 9,400	3,800 ~ 8,500 ~ 10,900
	Heating	Min.~Rated~Max.	kW	1.20 ~ 3.00 ~ 3.30	1.20 ~ 3.20 ~ 3.60
		Min.~Rated~Max.	Btu/h	4,100 ~ 10,200 ~ 11,300	4,100 ~ 10,900 ~ 12,300
Power Input	Cooling	Rated	kW	0.75	0.70
	Heating	Rated	kW	0.81	0.90
Running Current	Cooling	Rated	A	3.26	3.10
	Heating	Rated	A	3.52	4.00
SEER / SCOP			Wh / Wh	5.11 / 3.81	5.11 / 3.81
Seasonal Energy Label	Cooling / Heating		-	A / A	A / A
Annual Energy Consumption	Cooling / Heating		kWh	172 / 1,032	172 / 1,032

Combination	Outdoor unit			AUUW0 96D [UU09W ULD]	AUUW096D [UU09W ULD]
	Indoor unit			AVNH09GELA2 [CV09 NE2]	AQNH09GALA0 [CQ09 NA0]
Capacity	Cooling	Min.~Rated~Max.	kW	1.00 ~ 2.50 ~ 2.75	1.30 ~ 2.55 ~ 3.40
		Min.~Rated~Max.	Btu/h	3,400 ~ 8,500 ~ 9,400	4,400 ~ 8,700 ~ 11,600
	Heating	Min.~Rated~Max.	kW	1.20 ~ 3.00 ~ 3.30	1.36 ~ 3.10 ~ 4.20
		Min.~Rated~Max.	Btu/h	4,100 ~ 10,200 ~ 11,300	4,600 ~ 10,600 ~ 14,300
Power Input	Cooling	Rated	kW	0.75	0.64
	Heating	Rated	kW	0.83	0.74
Running Current	Cooling	Rated	A	3.26	3.42
	Heating	Rated	A	3.61	3.87
SEER / SCOP			Wh / Wh	5.11 / 3.51	5.11 / 3.81
Seasonal Energy Label	Cooling / Heating		-	A / A	A / A
Annual Energy Consumption	Cooling / Heating		kWh	172 / 1,120	172 / 1,032

Note

1. Due to our policy of innovation some specifications may be changed without notification.
2. Wiring cable size must comply with the applicable local and national codes. And “Electric characteristics” chapter should be considered for electrical work and design. Especially the power cable and circuit breaker should be selected in accordance with that.
3. Power factor could vary less than ±1% according to the operating conditions.
4. Sound pressure level is measured on the rated condition in the anechoic rooms by ISO 3745 standard.
   Sound power level is measured on the rated condition in the reverberation rooms by ISO 3741 standard.
   Therefore, these values can be increased owing to ambient conditions during operation.
5. Performances are based on the following conditions :
   - *Cooling : Indoot Ambient Temp. 27°CDB / 19°CWB, Outdoor Ambient Temp. 35°CDB / 24°CWB
   - *Heating : Indoot Ambient Temp. 20°CDB / 15°CWB, Outdoor Ambient Temp. 7°CDB / 6°CWB
   - Interconnected Pipe is standard length and difference of Elevation (Outdoor ~ Indoor Unit) is Zero.
6. This product contains Fluorinated greenhouse gases.

3. Specifications

Combination	Outdoor unit			AUUW126D [UU12W ULD]	AUUW126D [UU12W ULD]
	Indoor unit			ATNH12GRLE2 [CT12 NR2]	ABNH12GL2A2 [CB12L N22]
Capacity	Cooling	Min.~Rated~Max.	kW	1.36 ~ 3.40 ~ 3.74	1.40 ~ 3.40 ~ 3.70
		Min.~Rated~Max.	Btu/h	4,600 ~ 11,600 ~ 12,800	4,800 ~ 11,600 ~ 12,600
	Heating	Min.~Rated~Max.	kW	1.60 ~ 4.00 ~ 4.40	1.60 ~ 4.00 ~ 4.50
		Min.~Rated~Max.	Btu/h	5,500 ~ 13,600 ~ 15,000	5,500 ~ 13,600 ~ 15,400
Power Input	Cooling	Rated	kW	1.06	1.00
	Heating	Rated	kW	1.10	1.00
Running Current	Cooling	Rated	A	4.61	4.30
	Heating	Rated	A	4.78	4.60
SEER / SCOP			Wh / Wh	5.61 / 3.91	5.61 / 3.81
Seasonal Energy Label	Cooling / Heating		-	A+ / A	A+ / A
Annual Energy Consumption	Cooling / Heating		kWh	213 / 1,077	213 / 1,105

Combination	Outdoor unit			AUUW126D [UU12W ULD]	AUUW126D [UU12W ULD]
	Indoor unit			AVNH12GELA2 [CV12 NE2]	AQNH12GALA0 [CQ12 NA0]
Capacity	Cooling	Min.~Rated~Max.	kW	1.32 ~ 3.30 ~ 3.63	1.36 ~ 3.50 ~ 3.74
		Min.~Rated~Max.	Btu/h	4,500 ~ 11,300 ~ 12,400	4,600 ~ 11,600 ~ 12,800
	Heating	Min.~Rated~Max.	kW	1.52 ~ 3.80 ~ 4.18	1.60 ~ 4.00 ~ 4.40
		Min.~Rated~Max.	Btu/h	5,200 ~ 13,000 ~ 14,300	5,500 ~ 13,600 ~ 15,000
Power Input	Cooling	Rated	kW	1.09	1.06
	Heating	Rated	kW	1.18	1.08
Running Current	Cooling	Rated	A	4.74	5.02
	Heating	Rated	A	5.13	5.03
SEER / SCOP			Wh / Wh	5.31 / 3.61	5.31 / 3.81
Seasonal Energy Label	Cooling / Heating		-	A / A	A / A
Annual Energy Consumption	Cooling / Heating		kWh	218 / 1,167	231 / 1,105

Note

1. Due to our policy of innovation some specifications may be changed without notification.
2. Wiring cable size must comply with the applicable local and national codes. And “Electric characteristics” chapter should be considered for electrical work and design. Especially the power cable and circuit breaker should be selected in accordance with that.
3. Power factor could vary less than ±1% according to the operating conditions.
4. Sound pressure level is measured on the rated condition in the anechoic rooms by ISO 3745 standard.
   Sound power level is measured on the rated condition in the reverberation rooms by ISO 3741 standard.
   Therefore, these values can be increased owing to ambient conditions during operation.
5. Performances are based on the following conditions :
   - *Cooling : Indoot Ambient Temp. 27°CDB / 19°CWB, Outdoor Ambient Temp. 35°CDB / 24°CWB
   - *Heating : Indoot Ambient Temp. 20°CDB / 15°CWB, Outdoor Ambient Temp. 7°CDB / 6°CWB
   - Interconnected Pipe is standard length and difference of Elevation (Outdoor ~ Indoor Unit) is Zero.
6. This product contains Fluorinated greenhouse gases.

3. Specifications

Combination	Outdoor unit			AUUW18GAE [UU18W UE4]	AUUW18GAE [UU18W UE4]
	Indoor unit			ATNW18GQLA0 [CT18 NQ4]	ABNW18GM1A0 [CM18 N14]
Capacity	Cooling	Min.~Rated~Max.	kW	2.00 ~ 5.00 ~ 5.50	1.80 ~ 5.00 ~ 6.00
		Min.~Rated~Max.	Btu/h	6,800 ~ 17,100 ~ 18,700	6,100 ~ 17,100 ~ 20,500
	Heating	Min.~Rated~Max.	kW	2.20 ~ 5.80 ~ 6.80	2.20 ~ 6.00 ~ 7.20
		Min.~Rated~Max.	Btu/h	7,500 ~ 19,800 ~ 23,200	7,500 ~ 20,500 ~ 24,600
Power Input	Cooling	Rated	kW	1.56	1.46
	Heating	Rated	kW	1.66	1.66
Running Current	Cooling	Rated	A	7.10	6.50
	Heating	Rated	A	7.50	7.60
SEER / SCOP			Wh / Wh	6.10 / 4.25	6.10 / 4.15
Seasonal Energy Label	Cooling / Heating		-	A++ / A+	A++ / A+
Annual Energy Consumption	Cooling / Heating		kWh	287 / 1,351	287 / 1,383

Combination	Outdoor unit			AUUW18GAE [UU18W UE4]
	Indoor unit			ABNH18GL2A2 [CB18 N22]
Capacity	Cooling	Min.~Rated~Max.	kW	2.00 ~ 5.00 ~ 6.00
		Min.~Rated~Max.	Btu/h	6,800 ~ 17,100 ~ 20,500
	Heating	Min.~Rated~Max.	kW	2.20 ~ 6.00 ~ 7.20
		Min.~Rated~Max.	Btu/h	7,500 ~ 20,500 ~ 24,600
Power Input	Cooling	Rated	kW	1.55
	Heating	Rated	kW	1.50
Running Current	Cooling	Rated	A	6.80
	Heating	Rated	A	8.40
SEER / SCOP			Wh / Wh	6.10 / 3.95
Seasonal Energy Label	Cooling / Heating		-	A++ / A
Annual Energy Consumption	Cooling / Heating		kWh	287 / 1,418

Combination	Outdoor unit			AUUW18GAE [UU18W UE4]	AUUW18GAE [UU18W UE4]
	Indoor unit			UVNH18GJLA2 [CV18 NJ2]	AQNH18GALA0 [CQ18 NA0]
Capacity	Cooling	Min.~Rated~Max.	kW	1.92 ~ 5.00 ~ 5.80	2.20 ~ 5.00 ~ 5.60
		Min.~Rated~Max.	Btu/h	6,500 ~ 17,100 ~ 19,800	7,500 ~ 17,100 ~ 19,100
	Heating	Min.~Rated~Max.	kW	2.00 ~ 5.20 ~ 6.00	2.20 ~ 4.80 ~ 5.80
		Min.~Rated~Max.	Btu/h	6,800 ~ 17,700 ~ 20,500	7,500 ~ 16,400 ~ 19,800
Power Input	Cooling	Rated	kW	1.46	1.55
	Heating	Rated	kW	1.53	1.50
Running Current	Cooling	Rated	A	6.70	7.00
	Heating	Rated	A	6.90	6.90
SEER / SCOP			Wh / Wh	6.10 / 4.15	6.20 / 3.81
Seasonal Energy Label	Cooling / Heating		-	A++ / A+	A++ / A
Annual Energy Consumption	Cooling / Heating		kWh	287 / 1,349	282 / 1,396

Note

1. Due to our policy of innovation some specifications may be changed without notification.
2. Wiring cable size must comply with the applicable local and national codes. And “Electric characteristics” chapter should be considered for electrical work and design. Especially the power cable and circuit breaker should be selected in accordance with that.
3. Power factor could vary less than ±1% according to the operating conditions.
4. Sound pressure level is measured on the rated condition in the anechoic rooms by ISO 3745 standard.
   Sound power level is measured on the rated condition in the reverberation rooms by ISO 3741 standard.
   Therefore, these values can be increased owing to ambient conditions during operation.
5. Performances are based on the following conditions :
   - *Cooling : Indoot Ambient Temp. 27°CDB / 19°CWB, Outdoor Ambient Temp. 35°CDB / 24°CWB
   - *Heating : Indoot Ambient Temp. 20°CDB / 15°CWB, Outdoor Ambient Temp. 7°CDB / 6°CWB
   - Interconnected Pipe is standard length and difference of Elevation (Outdoor ~ Indoor Unit) is Zero.
6. This product contains Fluorinated greenhouse gases.

3. Specifications

Combination	Outdoor unit			AUUW24GAE [UU24W U44]	AUUW24GAE [UU24W U44]
	Indoor unit			ATNW24GPLA0 [CT24 NP4]	ABNW24GM1A0 [CM24 N14]
Capacity	Cooling	Min.~Rated~Max.	kW	2.84 ~ 6.80 ~ 7.80	2.80 ~ 6.80 ~ 7.48
		Min.~Rated~Max.	Btu/h	9,700 ~ 23,200 ~ 26,600	9,500 ~ 23,200 ~ 25,500
	Heating	Min.~Rated~Max.	kW	3.20 ~ 8.00 ~ 8.80	3.20 ~ 7.50 ~ 8.25
		Min.~Rated~Max.	Btu/h	10,900 ~ 27,300 ~ 30,000	10,900 ~ 25,600 ~ 28,100
Power Input	Cooling	Rated	kW	2.00	2.07
	Heating	Rated	kW	2.22	2.34
Running Current	Cooling	Rated	A	8.90	9.10
	Heating	Rated	A	9.70	10.30
SEER / SCOP			Wh / Wh	6.80 / 4.20	6.10 / 3.90
Seasonal Energy Label	Cooling / Heating		-	A++ / A+	A++ / A
Annual Energy Consumption	Cooling / Heating		kWh	350 / 2,110	390 / 2,154

Combination	Outdoor unit			AUUW24GAE [UU24W U44]	AUUW24GAE [UU24W U44]
	Indoor unit			ABNH24GL3A2 [CB24L N32]	UVNH24GJLA2 [CV24 NJ2]
Capacity	Cooling	Min.~Rated~Max.	kW	4.00 ~ 7.10 ~ 7.70	2.80 ~ 6.80 ~ 7.48
		Min.~Rated~Max.	Btu/h	13,600 ~ 24,200 ~ 26,300	9,500 ~ 23,200 ~ 25,500
	Heating	Min.~Rated~Max.	kW	2.00 ~ 7.50 ~ 8.25	3.08 ~ 7.50 ~ 8.25
		Min.~Rated~Max.	Btu/h	6,800 ~ 25,600 ~ 28,100	10,500 ~ 25,600 ~ 28,100
Power Input	Cooling	Rated	kW	2.36	2.25
	Heating	Rated	kW	2.05	2.45
Running Current	Cooling	Rated	A	10.4	9.90
	Heating	Rated	A	9.00	10.8
SEER / SCOP			Wh / Wh	5.60 / 3.90	5.80 / 3.90
Seasonal Energy Label	Cooling / Heating		-	A+ / A	A+ / A
Annual Energy Consumption	Cooling / Heating		kWh	444 / 2,082	410 / 2,154

Note

1. Due to our policy of innovation some specifications may be changed without notification.
2. Wiring cable size must comply with the applicable local and national codes. And “Electric characteristics” chapter should be considered for electrical work and design. Especially the power cable and circuit breaker should be selected in accordance with that.
3. Power factor could vary less than ±1% according to the operating conditions.
4. Sound pressure level is measured on the rated condition in the anechoic rooms by ISO 3745 standard.
   Sound power level is measured on the rated condition in the reverberation rooms by ISO 3741 standard.
   Therefore, these values can be increased owing to ambient conditions during operation.
5. Performances are based on the following conditions :
   - *Cooling : Indoot Ambient Temp. 27°CDB / 19°CWB, Outdoor Ambient Temp. 35°CDB / 24°CWB
   - *Heating : Indoot Ambient Temp. 20°CDB / 15°CWB, Outdoor Ambient Temp. 7°CDB / 6°CWB
   - Interconnected Pipe is standard length and difference of Elevation (Outdoor ~ Indoor Unit) is Zero.
6. This product contains Fluorinated greenhouse gases.

3. Specifications

Combination	Outdoor unit			AUUW30GAE [UU30W U44]	AUUW30GAE [UU30W U44]
	Indoor unit			ATNW30GPLA0 [UT30 NP4]	ABNW30GM1A0 [UM30 N14]
Capacity	Cooling	Min.~Rated~Max.	kW	3.20 ~ 8.00 ~ 8.80	3.20 ~ 7.80 ~ 8.80
		Min.~Rated~Max.	Btu/h	10,900 ~ 27,300 ~ 30,000	10,900 ~ 26,600 ~ 30,000
	Heating	Min.~Rated~Max.	kW	3.60 ~ 9.00 ~ 9.90	3.60 ~ 9.00 ~ 9.90
		Min.~Rated~Max.	Btu/h	12,300 ~ 30,700 ~ 33,800	12,300 ~ 30,700 ~ 33,800
Power Input	Cooling	Rated	kW	2.49	2.41
	Heating	Rated	kW	2.72	2.62
Running Current	Cooling	Rated	A	10.80	10.10
	Heating	Rated	A	11.80	10.70
SEER / SCOP			Wh / Wh	6.30 / 4.00	6.10 / 4.00
Seasonal Energy Label	Cooling / Heating		-	A++ / A+	A++ / A+
Annual Energy Consumption	Cooling / Heating		kWh	444 / 2,380	448 / 2,275

Combination	Outdoor unit			AUUW30GAE [UU30W U44]	AUUW30GAE [UU30W U44]
	Indoor unit			UVNH30GJLA2 [UV30 NJ2]	AJNW30GVLA0 [UJ30 NV2]
Capacity	Cooling	Min.~Rated~Max.	kW	3.04 ~ 7.60 ~ 8.40	3.50 ~ 7.80 ~ 8.50
		Min.~Rated~Max.	Btu/h	10,400 ~ 25,900 ~ 28,600	11,900 ~ 26,600 ~ 29,000
	Heating	Min.~Rated~Max.	kW	3.36 ~ 8.20 ~ 9.24	4.00 ~ 8.40 ~ 9.20
		Min.~Rated~Max.	Btu/h	11,500 ~ 28,000 ~ 31,500	13,600 ~ 28,700 ~ 31,400
Power Input	Cooling	Rated	kW	2.52	2.29
	Heating	Rated	kW	2.72	2.46
Running Current	Cooling	Rated	A	11.00	10.00
	Heating	Rated	A	11.80	10.70
SEER / SCOP			Wh / Wh	5.61 / 3.90	6.11 / 3.91
Seasonal Energy Label	Cooling / Heating		-	A+ / A	A++ / A
Annual Energy Consumption	Cooling / Heating		kWh	474 / 2,262	448 / 2,262

Note

1. Due to our policy of innovation some specifications may be changed without notification.
2. Wiring cable size must comply with the applicable local and national codes. And “Electric characteristics” chapter should be considered for electrical work and design. Especially the power cable and circuit breaker should be selected in accordance with that.
3. Power factor could vary less than ±1% according to the operating conditions.
4. Sound pressure level is measured on the rated condition in the anechoic rooms by ISO 3745 standard.
   Sound power level is measured on the rated condition in the reverberation rooms by ISO 3741 standard.
   Therefore, these values can be increased owing to ambient conditions during operation.
5. Performances are based on the following conditions :
   - *Cooling : Indoot Ambient Temp. 27°CDB / 19°CWB, Outdoor Ambient Temp. 35°CDB / 24°CWB
   - *Heating : Indoot Ambient Temp. 20°CDB / 15°CWB, Outdoor Ambient Temp. 7°CDB / 6°CWB
   - Interconnected Pipe is standard length and difference of Elevation (Outdoor ~ Indoor Unit) is Zero.
6. This product contains Fluorinated greenhouse gases.

3. Specifications

Combination	Outdoor unit			AUUW366D2 [UU36W UO2]	AUUW366D2 [UU36W UO2]
	Indoor unit			ATNH36GNLE2 [UT36 NN2]	ABNW36GM2A0 [UM36 N24]
Capacity	Cooling	Min.~Rated~Max.	kW	4.00 ~ 10.0 ~ 11.0	4.00 ~ 10.0 ~ 11.0
		Min.~Rated~Max.	Btu/h	13,600 ~ 34,100 ~ 37,500	13,600 ~ 34,100 ~ 37,500
	Heating	Min.~Rated~Max.	kW	4.40 ~ 11.0 ~ 12.1	4.50 ~ 11.2 ~ 12.3
		Min.~Rated~Max.	Btu/h	15,000 ~ 37,500 ~ 41,300	15,400 ~ 38,200 ~ 42,000
Power Input	Cooling	Rated	kW	2.82	3.12
	Heating	Rated	kW	3.09	3.19
Running Current	Cooling	Rated	A	12.30	13.60
	Heating	Rated	A	13.40	13.90
SEER / SCOP			Wh / Wh	5.41 / 3.81	5.11 / 3.81
Seasonal Energy Label	Cooling / Heating		-	A / A	A / A
Annual Energy Consumption	Cooling / Heating		kWh	648 / 2,800	685 / 2,866

Combination	Outdoor unit			AUUW366D2 [UU36W UO2]	AUUW366D2 [UU36W UO2]
	Indoor unit			UVNH36GKLA2 [UV36 NK2]	AJNW36GVLA0 [UJ36 NV2]
Capacity	Cooling	Min.~Rated~Max.	kW	3.80 ~ 9.50 ~ 10.5	4.00 ~ 9.50 ~ 10.50
		Min.~Rated~Max.	Btu/h	13,000 ~ 32,400 ~ 35,800	13,600 ~ 32,400 ~ 35,800
	Heating	Min.~Rated~Max.	kW	4.20 ~ 10.5 ~ 11.6	4.40 ~ 10.50 ~ 11.50
		Min.~Rated~Max.	Btu/h	14,300 ~ 35,800 ~ 39,600	15,000 ~ 35,800 ~ 39,200
Power Input	Cooling	Rated	kW	2.78	2.79
	Heating	Rated	kW	3.08	3.08
Running Current	Cooling	Rated	A	12.10	12.10
	Heating	Rated	A	13.40	13.40
SEER / SCOP			Wh / Wh	5.11 / 3.81	5.41 / 3.81
Seasonal Energy Label	Cooling / Heating		-	A / A	A / A
Annual Energy Consumption	Cooling / Heating		kWh	652 / 2,800	615 / 2,505

Note

1. Due to our policy of innovation some specifications may be changed without notification.
2. Wiring cable size must comply with the applicable local and national codes. And “Electric characteristics” chapter should be considered for electrical work and design. Especially the power cable and circuit breaker should be selected in accordance with that.
3. Power factor could vary less than ±1% according to the operating conditions.
4. Sound pressure level is measured on the rated condition in the anechoic rooms by ISO 3745 standard.
   Sound power level is measured on the rated condition in the reverberation rooms by ISO 3741 standard.
   Therefore, these values can be increased owing to ambient conditions during operation.
5. Performances are based on the following conditions :
   - *Cooling : Indoot Ambient Temp. 27°CDB / 19°CWB, Outdoor Ambient Temp. 35°CDB / 24°CWB
   - *Heating : Indoot Ambient Temp. 20°CDB / 15°CWB, Outdoor Ambient Temp. 7°CDB / 6°CWB
   - Interconnected Pipe is standard length and difference of Elevation (Outdoor ~ Indoor Unit) is Zero.
6. This product contains Fluorinated greenhouse gases.

3. Specifications

Combination	Outdoor unit			AUUW426D2 [UU42W U32]	AUUW426D2 [UU42W U32]
	Indoor unit			ATNH42GMLE2 [UT42 NM2]	ABNW42GM2A0 [UM42 N24]
Capacity	Cooling	Min.~Rated~Max.	kW	5.00 ~ 12.5 ~ 13.8	5.00 ~ 12.1 ~ 13.2
		Min.~Rated~Max.	Btu/h	17,100 ~ 42,700 ~ 47,100	17,100 ~ 41,300 ~ 45,000
	Heating	Min.~Rated~Max.	kW	5.00 ~ 14.0 ~ 15.4	5.60 ~ 14.0 ~ 15.0
		Min.~Rated~Max.	Btu/h	17,100 ~ 47,800 ~ 52,600	19,100 ~ 47,800 ~ 51,200
Power Input	Cooling	Rated	kW	3.89	3.76
	Heating	Rated	kW	3.88	3.86
Running Current	Cooling	Rated	A	16.90	16.60
	Heating	Rated	A	16.90	17.20
SEER / SCOP			Wh / Wh	-	-
Seasonal Energy Label	Cooling / Heating		-	-	-
Annual Energy Consumption	Cooling / Heating		kWh	-	-

Combination	Outdoor unit			AUUW426D2 [UU42W U32]
	Indoor unit			UVNH42GLLA2 [UV42 NL2]
Capacity	Cooling	Min.~Rated~Max.	kW	5.00 ~ 12.5 ~ 13.8
		Min.~Rated~Max.	Btu/h	17,100 ~ 42,700 ~ 47,100
	Heating	Min.~Rated~Max.	kW	5.60 ~ 13.6 ~ 15.4
		Min.~Rated~Max.	Btu/h	19,100 ~ 46,400 ~ 52,600
Power Input	Cooling	Rated	kW	3.89
	Heating	Rated	kW	3.68
Running Current	Cooling	Rated	A	16.90
	Heating	Rated	A	16.00
SEER / SCOP			Wh / Wh	-
Seasonal Energy Label	Cooling / Heating		-	-
Annual Energy Consumption	Cooling / Heating		kWh	-

Note

1. Due to our policy of innovation some specifications may be changed without notification.
2. Wiring cable size must comply with the applicable local and national codes. And “Electric characteristics” chapter should be considered for electrical work and design. Especially the power cable and circuit breaker should be selected in accordance with that.
3. Power factor could vary less than ±1% according to the operating conditions.
4. Sound pressure level is measured on the rated condition in the anechoic rooms by ISO 3745 standard.
   Sound power level is measured on the rated condition in the reverberation rooms by ISO 3741 standard.
   Therefore, these values can be increased owing to ambient conditions during operation.
5. Performances are based on the following conditions :
   - *Cooling : Indoot Ambient Temp. 27°CDB / 19°CWB, Outdoor Ambient Temp. 35°CDB / 24°CWB
   - *Heating : Indoot Ambient Temp. 20°CDB / 15°CWB, Outdoor Ambient Temp. 7°CDB / 6°CWB
   - Interconnected Pipe is standard length and difference of Elevation (Outdoor ~ Indoor Unit) is Zero.
6. This product contains Fluorinated greenhouse gases.

3. Specifications

Combination	Outdoor unit			AUUW486D2 [UU48W U32]	AUUW486D2 [UU48W U32]
	Indoor unit			ATNH48GMLE2 [UT48 NM2]	ABNW48GM3A0 [UM48 N34]
Capacity	Cooling	Min.~Rated~Max.	kW	5.48 ~ 13.9 ~ 15.7	5.60 ~ 14.0 ~ 15.4
		Min.~Rated~Max.	Btu/h	18,700 ~ 47,400 ~ 53,600	19,100 ~ 47,800 ~ 52,600
	Heating	Min.~Rated~Max.	kW	6.40 ~ 15.4 ~ 17.6	6.60 ~ 15.8 ~ 18.2
		Min.~Rated~Max.	Btu/h	21,800 ~ 52,600 ~ 60,100	22,500 ~ 53,900 ~ 62,100
Power Input	Cooling	Rated	kW	4.62	4.10
	Heating	Rated	kW	4.51	4.39
Running Current	Cooling	Rated	A	20.10	17.3
	Heating	Rated	A	19.60	18.5
SEER / SCOP			Wh / Wh	-	-
Seasonal Energy Label	Cooling / Heating		-	-	-
Annual Energy Consumption	Cooling / Heating		kWh	-	-

Combination	Outdoor unit			AUUW486D2 [UU48W U32]	AUUW486D2 [UU48W U32]
	Indoor unit			UVNH48GLLA2 [UV48 NL2]	APNH48GTLA0 [UP48 NT2]
Capacity	Cooling	Min.~Rated~Max.	kW	5.32 ~ 13.3 ~ 14.6	6.00 ~ 13.4 ~ 15.2
		Min.~Rated~Max.	Btu/h	18,200 ~ 45,400 ~ 49,800	20,500 ~ 45,700 ~ 51,900
	Heating	Min.~Rated~Max.	kW	6.40 ~ 15.3 ~ 17.6	6.00 ~ 15.5 ~ 17.1
		Min.~Rated~Max.	Btu/h	21,800 ~ 52,200 ~ 60,100	20,500 ~ 52,900 ~ 58,300
Power Input	Cooling	Rated	kW	4.28	4.20
	Heating	Rated	kW	4.49	4.50
Running Current	Cooling	Rated	A	18.60	18.10
	Heating	Rated	A	19.50	19.50
SEER / SCOP			Wh / Wh	-	-
Seasonal Energy Label	Cooling / Heating		-	-	-
Annual Energy Consumption	Cooling / Heating		kWh	-	-

Note

1. Due to our policy of innovation some specifications may be changed without notification.
2. Wiring cable size must comply with the applicable local and national codes. And “Electric characteristics” chapter should be considered for electrical work and design. Especially the power cable and circuit breaker should be selected in accordance with that.
3. Power factor could vary less than ±1% according to the operating conditions.
4. Sound pressure level is measured on the rated condition in the anechoic rooms by ISO 3745 standard.
   Sound power level is measured on the rated condition in the reverberation rooms by ISO 3741 standard.
   Therefore, these values can be increased owing to ambient conditions during operation.
5. Performances are based on the following conditions :
   - *Cooling : Indoot Ambient Temp. 27°CDB / 19°CWB, Outdoor Ambient Temp. 35°CDB / 24°CWB
   - *Heating : Indoot Ambient Temp. 20°CDB / 15°CWB, Outdoor Ambient Temp. 7°CDB / 6°CWB
   - Interconnected Pipe is standard length and difference of Elevation (Outdoor ~ Indoor Unit) is Zero.
6. This product contains Fluorinated greenhouse gases.

3. Specifications

Combination	Outdoor unit			AUUW606D2 [UU60W U32]	AUUW606D2 [UU60W U32]
	Indoor unit			ATNH60GMLE2 [UT60 NM2]	ABNW60GM3A0 [UM60 N34]
Capacity	Cooling	Min.~Rated~Max.	kW	5.92 ~ 14.6 ~ 16.3	5.90 ~ 15.0 ~ 16.3
		Min.~Rated~Max.	Btu/h	20,200 ~ 49,800 ~ 55,600	20,100 ~ 51,200 ~ 55,600
	Heating	Min.~Rated~Max.	kW	6.80 ~ 16.9 ~ 18.7	6.80 ~ 16.8 ~ 18.7
		Min.~Rated~Max.	Btu/h	23,200 ~ 57,700 ~ 63,800	23,200 ~ 57,300 ~ 63,800
Power Input	Cooling	Rated	kW	5.40	4.53
	Heating	Rated	kW	5.50	4.79
Running Current	Cooling	Rated	A	23.50	19.1
	Heating	Rated	A	23.90	20.2
SEER / SCOP			Wh / Wh	-	-
Seasonal Energy Label	Cooling / Heating		-	-	-
Annual Energy Consumption	Cooling / Heating		kWh	-	-

Combination	Outdoor unit			AUUW606D2 [UU60W U32]
	Indoor unit			UVNH60GLLA2 [UV60 NL2]
Capacity	Cooling	Min.~Rated~Max.	kW	5.72 ~ 14.4 ~ 15.7
		Min.~Rated~Max.	Btu/h	19,500 ~ 49,100 ~ 53,600
	Heating	Min.~Rated~Max.	kW	6.80 ~ 16.8 ~ 18.7
		Min.~Rated~Max.	Btu/h	23,200 ~ 57,300 ~ 63,800
Power Input	Cooling	Rated	kW	5.24
	Heating	Rated	kW	5.42
Running Current	Cooling	Rated	A	22.80
	Heating	Rated	A	23.60
SEER / SCOP			Wh / Wh	-
Seasonal Energy Label	Cooling / Heating		-	-
Annual Energy Consumption	Cooling / Heating		kWh	-

Note

1. Due to our policy of innovation some specifications may be changed without notification.
2. Wiring cable size must comply with the applicable local and national codes. And “Electric characteristics” chapter should be considered for electrical work and design. Especially the power cable and circuit breaker should be selected in accordance with that.
3. Power factor could vary less than ±1% according to the operating conditions.
4. Sound pressure level is measured on the rated condition in the anechoic rooms by ISO 3745 standard.
   Sound power level is measured on the rated condition in the reverberation rooms by ISO 3741 standard.
   Therefore, these values can be increased owing to ambient conditions during operation.
5. Performances are based on the following conditions :
   - *Cooling : Indoot Ambient Temp. 27°CDB / 19°CWB, Outdoor Ambient Temp. 35°CDB / 24°CWB
   - *Heating : Indoot Ambient Temp. 20°CDB / 15°CWB, Outdoor Ambient Temp. 7°CDB / 6°CWB
   - Interconnected Pipe is standard length and difference of Elevation (Outdoor ~ Indoor Unit) is Zero.
6. This product contains Fluorinated greenhouse gases.

3. Specifications

◆ DC Inverter SINGLE A (3Ø)

Combination	Outdoor unit			AUUW368D2 [UU37W UO2]	AUUW368D2 [UU37W UO2]
	Indoor unit			ATNH36GNLE2 [UT36 NN2]	ABNW36GM2A0 [UM36 N24]
Capacity	Cooling	Min.~Rated~Max.	kW	4.00 ~ 10.0 ~ 11.0	4.00 ~ 10.0 ~ 11.0
		Min.~Rated~Max.	Btu/h	13,600 ~ 34,100 ~ 37,500	13,600 ~ 34,100 ~ 37,500
	Heating	Min.~Rated~Max.	kW	4.40 ~ 11.0 ~ 12.1	4.50 ~ 11.2 ~ 12.3
		Min.~Rated~Max.	Btu/h	15,000 ~ 37,500 ~ 41,300	15,400 ~ 38,200 ~ 42,000
Power Input	Cooling	Rated	kW	2.82	3.12
	Heating	Rated	kW	3.09	3.19
Running Current	Cooling	Rated	A	4.10	4.70
	Heating	Rated	A	4.40	4.90
SEER / SCOP			Wh / Wh	5.41 / 3.81	5.11 / 3.81
Seasonal Energy Label	Cooling / Heating		-	A / A	A / A
Annual Energy Consumption	Cooling / Heating		kWh	648 / 2,800	685 / 2,866

Combination	Outdoor unit			AUUW368D2 [UU37W UO2]	AUUW368D2 [UU37W UO2]
	Indoor unit			UVNH36GKLA2 [UV36 NK2]	AJNW36GVLA0 [UJ36 NV2]
Capacity	Cooling	Min.~Rated~Max.	kW	3.80 ~ 9.50 ~ 10.5	4.00 ~ 9.50 ~ 10.50
		Min.~Rated~Max.	Btu/h	13,000 ~ 32,400 ~ 35,800	13,600 ~ 32,400 ~ 35,800
	Heating	Min.~Rated~Max.	kW	4.20 ~ 10.5 ~ 11.6	4.40 ~ 10.50 ~ 11.50
		Min.~Rated~Max.	Btu/h	14,300 ~ 35,800 ~ 39,600	15,000 ~ 35,800 ~ 39,200
Power Input	Cooling	Rated	kW	2.78	2.79
	Heating	Rated	kW	3.08	3.08
Running Current	Cooling	Rated	A	4.00	7.00
	Heating	Rated	A	4.40	7.70
SEER / SCOP			Wh / Wh	5.11 / 3.81	5.41 / 3.81
Seasonal Energy Label	Cooling / Heating		-	A / A	A / A
Annual Energy Consumption	Cooling / Heating		kWh	652 / 2,800	615 / 2,505

Note

1. Due to our policy of innovation some specifications may be changed without notification.
2. Wiring cable size must comply with the applicable local and national codes. And “Electric characteristics” chapter should be considered for electrical work and design. Especially the power cable and circuit breaker should be selected in accordance with that.
3. Power factor could vary less than ±1% according to the operating conditions.
4. Sound pressure level is measured on the rated condition in the anechoic rooms by ISO 3745 standard.
   Sound power level is measured on the rated condition in the reverberation rooms by ISO 3741 standard.
   Therefore, these values can be increased owing to ambient conditions during operation.
5. Performances are based on the following conditions :
   - *Cooling : Indoot Ambient Temp. 27°CDB / 19°CWB, Outdoor Ambient Temp. 35°CDB / 24°CWB
   - *Heating : Indoot Ambient Temp. 20°CDB / 15°CWB, Outdoor Ambient Temp. 7°CDB / 6°CWB
   - Interconnected Pipe is standard length and difference of Elevation (Outdoor ~ Indoor Unit) is Zero.
6. This product contains Fluorinated greenhouse gases.

3. Specifications

Combination	Outdoor unit			AUUW428D2 [UU43W U32]	AUUW428D2 [UU43W U32]
	Indoor unit			ATNH42GMLE2 [UT42 NM2]	ABNW42GM2A0 [UM42 N24]
Capacity	Cooling	Min.~Rated~Max.	kW	5.00 ~ 12.5 ~ 13.8	5.00 ~ 12.1 ~ 13.2
		Min.~Rated~Max.	Btu/h	17,100 ~ 42,700 ~ 47,100	17,100 ~ 41,300 ~ 45,000
	Heating	Min.~Rated~Max.	kW	5.00 ~ 14.0 ~ 15.4	5.60 ~ 14.0 ~ 15.0
		Min.~Rated~Max.	Btu/h	17,100 ~ 47,800 ~ 52,600	19,100 ~ 47,800 ~ 51,200
Power Input	Cooling	Rated	kW	3.89	3.76
	Heating	Rated	kW	3.88	3.86
Running Current	Cooling	Rated	A	5.60	5.40
	Heating	Rated	A	5.60	5.60
SEER / SCOP			Wh / Wh	-	-
Seasonal Energy Label	Cooling / Heating		-	-	-
Annual Energy Consumption	Cooling / Heating		kWh	-	-

Combination	Outdoor unit			AUUW428D2 [UU43W U32]
	Indoor unit			UVNH42GLLA2 [UV42 NL2]
Capacity	Cooling	Min.~Rated~Max.	kW	5.00 ~ 12.5 ~ 13.8
		Min.~Rated~Max.	Btu/h	17,100 ~ 42,700 ~ 47,100
	Heating	Min.~Rated~Max.	kW	5.60 ~ 13.6 ~ 15.4
		Min.~Rated~Max.	Btu/h	19,100 ~ 46,400 ~ 52,600
Power Input	Cooling	Rated	kW	3.89
	Heating	Rated	kW	3.68
Running Current	Cooling	Rated	A	5.60
	Heating	Rated	A	5.30
SEER / SCOP			Wh / Wh	-
Seasonal Energy Label	Cooling / Heating		-	-
Annual Energy Consumption	Cooling / Heating		kWh	-

Note

1. Due to our policy of innovation some specifications may be changed without notification.
2. Wiring cable size must comply with the applicable local and national codes. And “Electric characteristics” chapter should be considered for electrical work and design. Especially the power cable and circuit breaker should be selected in accordance with that.
3. Power factor could vary less than ±1% according to the operating conditions.
4. Sound pressure level is measured on the rated condition in the anechoic rooms by ISO 3745 standard.
   Sound power level is measured on the rated condition in the reverberation rooms by ISO 3741 standard.
   Therefore, these values can be increased owing to ambient conditions during operation.
5. Performances are based on the following conditions :
   - *Cooling : Indoot Ambient Temp. 27°CDB / 19°CWB, Outdoor Ambient Temp. 35°CDB / 24°CWB
   - *Heating : Indoot Ambient Temp. 20°CDB / 15°CWB, Outdoor Ambient Temp. 7°CDB / 6°CWB
   - Interconnected Pipe is standard length and difference of Elevation (Outdoor ~ Indoor Unit) is Zero.
6. This product contains Fluorinated greenhouse gases.

3. Specifications

Combination	Outdoor unit			AUUW488D2 [UU49W U32]	AUUW488D2 [UU49W U32]
	Indoor unit			ATNH48GMLE2 [UT48 NM2]	ABNW48GM3A0 [UM48 N34]
Capacity	Cooling	Min.~Rated~Max.	kW	5.48 ~ 13.9 ~ 15.7	5.60 ~ 14.0 ~ 15.4
		Min.~Rated~Max.	Btu/h	18,700 ~ 47,400 ~ 53,600	19,100 ~ 47,800 ~ 52,600
	Heating	Min.~Rated~Max.	kW	6.40 ~ 15.3 ~ 17.6	6.60 ~ 15.8 ~ 18.2
		Min.~Rated~Max.	Btu/h	21,800 ~ 52,200 ~ 60,100	22,500 ~ 53,900 ~ 62,100
Power Input	Cooling	Rated	kW	4.62	4.10
	Heating	Rated	kW	4.49	4.39
Running Current	Cooling	Rated	A	6.70	6.00
	Heating	Rated	A	6.50	6.50
SEER / SCOP			Wh / Wh	-	-
Seasonal Energy Label	Cooling / Heating		-	-	-
Annual Energy Consumption	Cooling / Heating		kWh	-	-

Combination	Outdoor unit			AUUW488D2 [UU49W U32]	AUUW488D2 [UU49W U32]
	Indoor unit			UVNH48GLLA2 [UV48 NL2]	APNH48GTLA0 [UP48 NT2]
Capacity	Cooling	Min.~Rated~Max.	kW	5.32 ~ 13.3 ~ 14.6	6.00 ~ 13.4 ~ 15.2
		Min.~Rated~Max.	Btu/h	18,200 ~ 45,400 ~ 49,800	20,500 ~ 45,700 ~ 51,900
	Heating	Min.~Rated~Max.	kW	6.40 ~ 15.3 ~ 17.6	6.00 ~ 15.5 ~ 17.1
		Min.~Rated~Max.	Btu/h	21,800 ~ 52,200 ~ 60,100	20,500 ~ 52,900 ~ 58,300
Power Input	Cooling	Rated	kW	4.28	4.20
	Heating	Rated	kW	4.49	4.50
Running Current	Cooling	Rated	A	6.20	5.76
	Heating	Rated	A	6.50	6.20
SEER / SCOP			Wh / Wh	-	-
Seasonal Energy Label	Cooling / Heating		-	-	-
Annual Energy Consumption	Cooling / Heating		kWh	-	-

Note

1. Due to our policy of innovation some specifications may be changed without notification.
2. Wiring cable size must comply with the applicable local and national codes. And “Electric characteristics” chapter should be considered for electrical work and design. Especially the power cable and circuit breaker should be selected in accordance with that.
3. Power factor could vary less than ±1% according to the operating conditions.
4. Sound pressure level is measured on the rated condition in the anechoic rooms by ISO 3745 standard.
   Sound power level is measured on the rated condition in the reverberation rooms by ISO 3741 standard.
   Therefore, these values can be increased owing to ambient conditions during operation.
5. Performances are based on the following conditions :
   - *Cooling : Indoot Ambient Temp. 27°CDB / 19°CWB, Outdoor Ambient Temp. 35°CDB / 24°CWB
   - *Heating : Indoot Ambient Temp. 20°CDB / 15°CWB, Outdoor Ambient Temp. 7°CDB / 6°CWB
   - Interconnected Pipe is standard length and difference of Elevation (Outdoor ~ Indoor Unit) is Zero.
6. This product contains Fluorinated greenhouse gases.

3. Specifications

Combination	Outdoor unit			AUUW608D2 [UU61W U32]	AUUW608D2 [UU61W U32]
	Indoor unit			ATNH60GMLE2 [UT60 NM2]	ABNW60GM3A0 [UM60 N34]
Capacity	Cooling	Min.~Rated~Max.	kW	5.92 ~ 14.6 ~ 16.3	5.90 ~ 15.0 ~ 16.3
		Min.~Rated~Max.	Btu/h	20,200 ~ 49,800 ~ 55,600	20,100 ~ 51,200 ~ 55,600
	Heating	Min.~Rated~Max.	kW	6.80 ~ 16.9 ~ 18.7	6.80 ~ 16.8 ~ 18.7
		Min.~Rated~Max.	Btu/h	23,200 ~ 57,700 ~ 63,800	23,200 ~ 57,300 ~ 63,800
Power Input	Cooling	Rated	kW	5.40	4.53
	Heating	Rated	kW	5.50	4.79
Running Current	Cooling	Rated	A	7.8	6.60
	Heating	Rated	A	8.0	7.10
SEER / SCOP			Wh / Wh	-	-
Seasonal Energy Label	Cooling / Heating		-	-	-
Annual Energy Consumption	Cooling / Heating		kWh	-	-

Combination	Outdoor unit			AUUW608D2 [UU61W U32]
	Indoor unit			UVNH60GLLA2 [UV60 NL2]
Capacity	Cooling	Min.~Rated~Max.	kW	5.72 ~ 14.4 ~ 15.7
		Min.~Rated~Max.	Btu/h	19,500 ~ 49,100 ~ 53,600
	Heating	Min.~Rated~Max.	kW	6.80 ~ 16.8 ~ 18.7
		Min.~Rated~Max.	Btu/h	23,200 ~ 57,300 ~ 63,800
Power Input	Cooling	Rated	kW	5.24
	Heating	Rated	kW	5.42
Running Current	Cooling	Rated	A	7.6
	Heating	Rated	A	7.9
SEER / SCOP			Wh / Wh	-
Seasonal Energy Label	Cooling / Heating		-	-
Annual Energy Consumption	Cooling / Heating		kWh	-

Combination	Outdoor unit			AUUW70LAE [UU70W U34]	AUUW85LAE [UU85W U74]
	Indoor unit			ABNW70GB9A0 [UB70 N94]	ABNW85GB9A0 [UB85 N94]
Capacity	Cooling	Min.~Rated~Max.	kW	7.6 ~ 19.0 ~ 20.9	9.2 ~ 23.0 ~ 25.3
		Min.~Rated~Max.	Btu/h	25,930~64,830 ~71,310	31,400 ~ 78,480 ~ 86,330
	Heating	Min.~Rated~Max.	kW	9.0 ~ 22.4 ~ 24.6	10.8 ~ 27.0 ~ 29.7
		Min.~Rated~Max.	Btu/h	30,700 ~ 76,430 ~83,930	36,850 ~ 92,130 ~ 101,350
Power Input	Cooling	Rated	kW	6.69	8.19
	Heating	Rated	kW	6.4	8.31
Running Current	Cooling	Rated	A	11.5	13.5
	Heating	Rated	A	10.7	13.6
SEER / SCOP			Wh / Wh	-	-
Seasonal Energy Label	Cooling / Heating		-	-	-
Annual Energy Consumption	Cooling / Heating		kWh	-	-

Note

1. Due to our policy of innovation some specifications may be changed without notification.
2. Wiring cable size must comply with the applicable local and national codes. And “Electric characteristics” chapter should be considered for electrical work and design. Especially the power cable and circuit breaker should be selected in accordance with that.
3. Power factor could vary less than ±1% according to the operating conditions.
4. Sound pressure level is measured on the rated condition in the anechoic rooms by ISO 3745 standard.
   Sound power level is measured on the rated condition in the reverberation rooms by ISO 3741 standard.
   Therefore, these values can be increased owing to ambient conditions during operation.
5. Performances are based on the following conditions :
   - *Cooling : Indoot Ambient Temp. 27°CDB / 19°CWB, Outdoor Ambient Temp. 35°CDB / 24°CWB
   - *Heating : Indoot Ambient Temp. 20°CDB / 15°CWB, Outdoor Ambient Temp. 7°CDB / 6°CWB
   - Interconnected Pipe is standard length and difference of Elevation (Outdoor ~ Indoor Unit) is Zero.
6. This product contains Fluorinated greenhouse gases.

3. Specifications

◆ DC Inverter SINGLE A (1Ø)

Outdoor unit				AUUW096D [UU09W ULD]	AUUW126D [UU12W ULD]
Power Supply			V , Ø , Hz	220-240, 1, 50	220-240, 1, 50
Wiring Connections	Power Supply Cable (included Earth)		No. x mm^2 (AWG)	3C x 2.5 (12)	3C x 2.5 (12)
Casing Color			-	Warm Gray	Warm Gray
Dimensions		W x H x D	mm	770 x 540 x 245	770 x 540 x 245
Net Weight			kg (lbs)	32.0 (70.5)	32.0 (70.5)
Compressor	Type		-	Rotary	Rotary
	Model		Model x No.	5RS102XAA21 x 1	5RS102XAA21 x 1
	Motor type		-	BLDC	BLDC
	Motor Output		W x No.	1,300 x 1	1,300 x 1
Refrigerant	Type		-	R410A	R410A
	Precharged Amount		g (oz)	1,000 (35.3)	1,000 (35.3)
	Chargeless-Pipe Length		m (ft)	7.5 (24.6)	7.5 (24.6)
	Additional Charging Volume		g/m (oz/ft)	20 (0.22)	20 (0.22)
	Control		-	Electronic Expansion Valve	
Refrigerant Oil	Type		-	FV50S	FV50S
	Charged volume		cc x No.	320 x 1	320 x 1
Heat Exchanger	(Row x Column x Fins per inch) x No.			(2 x 24 x 17) x 1	(2 x 24 x 17) x 1
Fan	Type		-	Propeller	Propeller
	Air Flow Rate		m^3/min x No.	32 x 1	32 x 1
Fan Motor	Type			BLDC	BLDC
	Output		W x No.	43.0 x 1	43.0 x 1
Sound Pressure Level	Cooling	Rated	dB(A)	47	47
	Heating	Rated	dB(A)	48	48
Sound Power Level	Cooling	Max.	dB(A)	56	57
Piping Connections	Liquid	Outer Dia.	mm(inch)	Ø 6.35 (1/4)	Ø 6.35 (1/4)
	Gas	Outer Dia.	mm(inch)	Ø 9.52 (3/8)	Ø 9.52 (3/8)
Piping Length		Max.	m (ft)	15 (49.2)	15 (49.2)
Maximum Height Difference	Outdoor Unit ~ Indoor Unit	Max.	m (ft)	10 (32.8)	10 (32.8)
Operation Range (Outdoor Temperature)	Cooling	Min. ~ Max.	℃ DB (˚F DB)	-10 (14) ~ 43 (109.4)	-10 (14) ~ 43 (109.4)
	Heating	Min. ~ Max.	℃ WB (˚F WB)	-18 (-0.4) ~ 18 (64.4)	-18 (-0.4) ~ 18 (64.4)

Note

1. Due to our policy of innovation some specifications may be changed without notification.
2. Wiring cable size must comply with the applicable local and national codes. And “Electric characteristics” chapter should be considered for electrical work and design. Especially the power cable and circuit breaker should be selected in accordance with that.
3. Power factor could vary less than ±1% according to the operating conditions.
4. Sound pressure level is measured on the rated condition in the anechoic rooms by ISO 3745 standard.
   Sound power level is measured on the rated condition in the reverberation rooms by ISO 3741 standard.
   Therefore, these values can be increased owing to ambient conditions during operation.
5. Performances are based on the following conditions :
   - *Cooling : Indoot Ambient Temp. 27°CDB / 19°CWB, Outdoor Ambient Temp. 35°CDB / 24°CWB
   - *Heating : Indoot Ambient Temp. 20°CDB / 15°CWB, Outdoor Ambient Temp. 7°CDB / 6°CWB
   - Interconnected Pipe is standard length and difference of Elevation (Outdoor ~ Indoor Unit) is Zero.
6. This product contains Fluorinated greenhouse gases.

3. Specifications

Outdoor unit				AUUW18GAE [UU18W UE4]	AUUW24GAE [UU24W U44]
Power Supply			V , Ø , Hz	220-240 / 1 / 50	220-240 / 1 / 50
Wiring Connections	Power Supply Cable (included Earth)		No. x mm^2 (AWG)	3C x 2.5 (12)	3C x 2.5 (12)
Casing Color			-	Warm Gray	Warm Gray
Dimensions		W x H x D	mm	870 × 655 × 320	950 × 834× 330
Net Weight			kg (lbs)	46.0 (98.3)	56.1 (123.6)
Compressor	Type		-	Twin Rotary	Twin Rotary
	Model		Model x No.	GKT176MAC x 1	GKT208MAB x 1
	Motor type		-	BLDC	BLDC
	Motor Output		W x No.	1,500 x 1	1,500 x 1
Refrigerant	Type		-	R410A	R410A
	Precharged Amount		g (oz)	1,300 (49.4)	2,000 (70.5)
	Chargeless-Pipe Length		m (ft)	7.5 (24.6)	7.5 (24.6)
	Additional Charging Volume		g/m (oz/ft)	20 (0.22)	40 (0.43)
	Control		-	Electronic Expansion Valve	
Refrigerant Oil	Type		-	FVC68D	FVC68D
	Charged volume		cc x No.	670 x 1	670 x 1
Heat Exchanger	(Row x Column x Fins per inch) x No.			(2 x 28 x 14) x 1	(2 x 38 x 14) x 1
Fan	Type		-	Axial	Axial
	Air Flow Rate		m^3/min x No.	50 x 1	58 x 1
Fan Motor	Type			BLDC	BLDC
	Output		W x No.	85.4 x 1	124 x 1
Sound Pressure Level	Cooling	Rated	dB(A)	47	48
	Heating	Rated	dB(A)	52	52
Sound Power Level	Cooling	Max.	dB(A)	63	67
Piping Connections	Liquid	Outer Dia.	mm(inch)	Ø 6.35 (1/4)	Ø 9.52(3/8)
	Gas	Outer Dia.	mm(inch)	Ø 12.7 (1/2)	Ø 15.88 (5/8)
Piping Length		Max.	m (ft)	30 (98.4)	50 (164.0)
Maximum Height Difference	Outdoor Unit ~ Indoor Unit	Max.	m (ft)	30 (98.4)	30 (98.4)
Operation Range (Outdoor Temperature)	Cooling	Min. ~ Max.	℃ DB (˚F DB)	-15 (5.0) ~ 48 (118.4)	-15 (5.0) ~ 48 (118.4)
	Heating	Min. ~ Max.	℃ WB (˚F WB)	-18 (-0.4) ~ 18 (64.4)	-18 (-0.4) ~ 18 (64.4)

Note

1. Due to our policy of innovation some specifications may be changed without notification.
2. Wiring cable size must comply with the applicable local and national codes. And “Electric characteristics” chapter should be considered for electrical work and design. Especially the power cable and circuit breaker should be selected in accordance with that.
3. Power factor could vary less than ±1% according to the operating conditions.
4. Sound pressure level is measured on the rated condition in the anechoic rooms by ISO 3745 standard.
   Sound power level is measured on the rated condition in the reverberation rooms by ISO 3741 standard.
   Therefore, these values can be increased owing to ambient conditions during operation.
5. Performances are based on the following conditions :
   - *Cooling : Indoot Ambient Temp. 27°CDB / 19°CWB, Outdoor Ambient Temp. 35°CDB / 24°CWB
   - *Heating : Indoot Ambient Temp. 20°CDB / 15°CWB, Outdoor Ambient Temp. 7°CDB / 6°CWB
   - Interconnected Pipe is standard length and difference of Elevation (Outdoor ~ Indoor Unit) is Zero.
6. This product contains Fluorinated greenhouse gases.

3. Specifications

Outdoor unit				AUUW30GAE [UU30W U44]	AUUW366D2 [UU36W UO2]
Power Supply			V , Ø , Hz	220-240, 1, 50	220-240, 1, 50
Wiring Connections	Power Supply Cable (included Earth)		No. x mm^2 (AWG)	3C x 2.5 (12)	3C x 5.0 (8)
Casing Color			-	Warm Gray	Warm Gray
Dimensions		W x H x D	mm	950 × 834 × 330	950 x 1,170 × 330
Net Weight			kg (lbs)	58.0 (127.8)	81.0 (178.6)
Compressor	Type		-	Twin Rotary	Twin Rotary
	Model		Model x No.	GJT240MAA x 1	GPT442MBA x 1
	Motor type		-	BLDC	BLDC
	Motor Output		W x No.	2,137 x 1	4,000 x 1
Refrigerant	Type		-	R410A	R410A
	Precharged Amount		g (oz)	2,000 (70.5)	2,800 (98.8)
	Chargeless-Pipe Length		m (ft)	7.5 (24.6)	7.5 (24.6)
	Additional Charging Volume		g/m (oz/ft)	40 (0.43)	40 (0.43)
	Control		-	Electronic Expansion Valve	
Refrigerant Oil	Type		-	FVC68D	FVC68D
	Charged volume		cc x No.	900 x 1	1,300 x 1
Heat Exchanger	(Row x Column x Fins per inch) x No.			(2 x 38 x 14) x 1	(2 x 32 x 14) x 1 + (2 x 22 x 14) x 1
Fan	Type		-	Axial	Propeller
	Air Flow Rate		m^3/min x No.	58 x 1	45 x 2
Fan Motor	Type			BLDC	BLDC
	Output		W x No.	124 x 1	85.4 x 2
Sound Pressure Level	Cooling	Rated	dB(A)	48	53
	Heating	Rated	dB(A)	52	54
Sound Power Level	Cooling	Max.	dB(A)	68	66
Piping Connections	Liquid	Outer Dia.	mm(inch)	Ø 9.52(3/8)	Ø 9.52 (3/8)
	Gas	Outer Dia.	mm(inch)	Ø 15.88 (5/8)	Ø 15.88 (5/8)
Piping Length		Max.	m (ft)	50 (164.0)	50 (164.0)
Maximum Height Difference	Outdoor Unit ~ Indoor Unit	Max.	m (ft)	30 (98.4)	30 (98.4)
Operation Range (Outdoor Temperature)	Cooling	Min. ~ Max.	℃ DB (˚F DB)	-18 (-0.4) ~ 18 (64.4)	-15 (5.0) ~ 48 (118.4)
	Heating	Min. ~ Max.	℃ WB (˚F WB)	-18 (-0.4) ~ 18 (64.4)	-18 (-0.4) ~ 18 (64.4)

Note

1. Due to our policy of innovation some specifications may be changed without notification.
2. Wiring cable size must comply with the applicable local and national codes. And “Electric characteristics” chapter should be considered for electrical work and design. Especially the power cable and circuit breaker should be selected in accordance with that.
3. Power factor could vary less than ±1% according to the operating conditions.
4. Sound pressure level is measured on the rated condition in the anechoic rooms by ISO 3745 standard.
   Sound power level is measured on the rated condition in the reverberation rooms by ISO 3741 standard.
   Therefore, these values can be increased owing to ambient conditions during operation.
5. Performances are based on the following conditions :
   - *Cooling : Indoot Ambient Temp. 27°CDB / 19°CWB, Outdoor Ambient Temp. 35°CDB / 24°CWB
   - *Heating : Indoot Ambient Temp. 20°CDB / 15°CWB, Outdoor Ambient Temp. 7°CDB / 6°CWB
   - Interconnected Pipe is standard length and difference of Elevation (Outdoor ~ Indoor Unit) is Zero.
6. This product contains Fluorinated greenhouse gases.

3. Specifications

Outdoor unit				AUUW426D2 [UU42W U32]	AUUW486D2 [UU48W U32]
Power Supply			V , Ø , Hz	220-240, 1, 50	220-240, 1, 50
Wiring Connections	Power Supply Cable (included Earth)		No. x mm^2 (AWG)	3C x 5.0 (8)	3C x 5.0 (8)
Casing Color			-	Warm Gray	Warm Gray
Dimensions		W x H x D	mm	950 × 1,380 × 330	950 × 1,380 × 330
Net Weight			kg (lbs)	92.0 (202.8)	92.0 (202.8)
Compressor	Type		-	Twin Rotary	Twin Rotary
	Model		Model x No.	GPT442MBA x 1	GPT442MBA x 1
	Motor type		-	BLDC	BLDC
	Motor Output		W x No.	4,000 x 1	4,000 x 1
Refrigerant	Type		-	R410A	R410A
	Precharged Amount		g (oz)	3,400 (119.9)	3,400 (119.9)
	Chargeless-Pipe Length		m (ft)	7.5 (24.6)	7.5 (24.6)
	Additional Charging Volume		g/m (oz/ft)	40 (0.43)	40 (0.43)
	Control		-	Electronic Expansion Valve	
Refrigerant Oil	Type		-	FVC68D	FVC68D
	Charged volume		cc x No.	1,300 x 1	1,300 x 1
Heat Exchanger	(Row x Column x Fins per inch) x No.			(2 x 32 x 14) x 2	(2 x 32 x 14) x 2
Fan	Type		-	Propeller	Propeller
	Air Flow Rate		m^3/min x No.	55 x 2	55 x 2
Fan Motor	Type			BLDC	BLDC
	Output		W x No.	124 x 2	124 x 2
Sound Pressure Level	Cooling	Rated	dB(A)	52	52
	Heating	Rated	dB(A)	54	54
Sound Power Level	Cooling	Max.	dB(A)	67	68
Piping Connections	Liquid	Outer Dia.	mm(inch)	Ø 9.52 (3/8)	Ø 9.52 (3/8)
	Gas	Outer Dia.	mm(inch)	Ø 15.88 (5/8)	Ø 15.88 (5/8)
Piping Length		Max.	m (ft)	75 (246.1)	75 (246.1)
Maximum Height Difference	Outdoor Unit ~ Indoor Unit	Max.	m (ft)	30 (98.4)	30 (98.4)
Operation Range (Outdoor Temperature)	Cooling	Min. ~ Max.	℃ DB (˚F DB)	-15 (5.0) ~ 48 (118.4)	-15 (5.0) ~ 48 (118.4)
	Heating	Min. ~ Max.	℃ WB (˚F WB)	-18 (-0.4) ~ 18 (64.4)	-18 (-0.4) ~ 18 (64.4)

Note

1. Due to our policy of innovation some specifications may be changed without notification.
2. Wiring cable size must comply with the applicable local and national codes. And “Electric characteristics” chapter should be considered for electrical work and design. Especially the power cable and circuit breaker should be selected in accordance with that.
3. Power factor could vary less than ±1% according to the operating conditions.
4. Sound pressure level is measured on the rated condition in the anechoic rooms by ISO 3745 standard.
   Sound power level is measured on the rated condition in the reverberation rooms by ISO 3741 standard.
   Therefore, these values can be increased owing to ambient conditions during operation.
5. Performances are based on the following conditions :
   - *Cooling : Indoot Ambient Temp. 27°CDB / 19°CWB, Outdoor Ambient Temp. 35°CDB / 24°CWB
   - *Heating : Indoot Ambient Temp. 20°CDB / 15°CWB, Outdoor Ambient Temp. 7°CDB / 6°CWB
   - Interconnected Pipe is standard length and difference of Elevation (Outdoor ~ Indoor Unit) is Zero.
6. This product contains Fluorinated greenhouse gases.

3. Specifications

Outdoor unit				AUUW606D2 [UU60W U32]
Power Supply			V , Ø , Hz	220-240, 1, 50
Wiring Connections	Power Supply Cable (included Earth)		No. x mm^2 (AWG)	3C x 5.0 (8)
Casing Color			-	Warm Gray
Dimensions		W x H x D	mm	950 × 1,380 × 330
Net Weight			kg (lbs)	92.0 (202.8)
Compressor	Type		-	Twin Rotary
	Model		Model x No.	GPT442MBA x 1
	Motor type		-	BLDC
	Motor Output		W x No.	4,000 x 1
Refrigerant	Type		-	R410A
	Precharged Amount		g (oz)	3,400 (119.9)
	Chargeless-Pipe Length		m (ft)	7.5 (24.6)
	Additional Charging Volume		g/m (oz/ft)	40 (0.43)
	Control		-	Electronic Expansion Valve
Refrigerant Oil	Type		-	FVC68D
	Charged volume		cc x No.	1,300 x 1
Heat Exchanger	(Row x Column x Fins per inch) x No.			(2 x 32 x 14) x 2
Fan	Type		-	Propeller
	Air Flow Rate		m^3/min x No.	55 x 2
Fan Motor	Type			BLDC
	Output		W x No.	124 x 2
Sound Pressure Level	Cooling	Rated	dB(A)	52
	Heating	Rated	dB(A)	54
Sound Power Level	Cooling	Max.	dB(A)	71
Piping Connections	Liquid	Outer Dia.	mm(inch)	Ø 9.52 (3/8)
	Gas	Outer Dia.	mm(inch)	Ø 15.88 (5/8)
Piping Length		Max.	m (ft)	75 (246.1)
Maximum Height Difference	Outdoor Unit ~ Indoor Unit	Max.	m (ft)	30 (98.4)
Operation Range (Outdoor Temperature)	Cooling	Min. ~ Max.	℃ DB (˚F DB)	-15 (5.0) ~ 48 (118.4)
	Heating	Min. ~ Max.	℃ WB (˚F WB)	-18 (-0.4) ~ 18 (64.4)

Note

1. Due to our policy of innovation some specifications may be changed without notification.
2. Wiring cable size must comply with the applicable local and national codes. And “Electric characteristics” chapter should be considered for electrical work and design. Especially the power cable and circuit breaker should be selected in accordance with that.
3. Power factor could vary less than ±1% according to the operating conditions.
4. Sound pressure level is measured on the rated condition in the anechoic rooms by ISO 3745 standard.
   Sound power level is measured on the rated condition in the reverberation rooms by ISO 3741 standard.
   Therefore, these values can be increased owing to ambient conditions during operation.
5. Performances are based on the following conditions :
   - *Cooling : Indoot Ambient Temp. 27°CDB / 19°CWB, Outdoor Ambient Temp. 35°CDB / 24°CWB
   - *Heating : Indoot Ambient Temp. 20°CDB / 15°CWB, Outdoor Ambient Temp. 7°CDB / 6°CWB
   - Interconnected Pipe is standard length and difference of Elevation (Outdoor ~ Indoor Unit) is Zero.
6. This product contains Fluorinated greenhouse gases.

3. Specifications

◆ DC Inverter SINGLE A (3Ø)

Outdoor unit				AUUW368D2 [UU37W UO2]	AUUW428D2 [UU43W U32]
Power Supply			V , Ø , Hz	380-415, 3, 50	380-415, 3, 50
Wiring Connections	Power Supply Cable (included Earth)		No. x mm^2 (AWG)	5C x 2.5 (12)	5C x 2.5 (12)
Casing Color			-	Warm Gray	Warm Gray
Dimensions		W x H x D	mm	950 x 1,170 × 330	950 × 1,380 × 330
Net Weight			kg (lbs)	85.0 (187.4)	96.0 (211.6)
Compressor	Type		-	Twin Rotary	Twin Rotary
	Model		Model x No.	GPT442MAA x 1	GPT442MAA x 1
	Motor type		-	BLDC	BLDC
	Motor Output		W x No.	4,000 x 1	4,000 x 1
Refrigerant	Type		-	R410A	R410A
	Precharged Amount		g (oz)	2,800 (98.8)	3,400 (119.9)
	Chargeless-Pipe Length		m (ft)	7.5 (24.6)	7.5 (24.6)
	Additional Charging Volume		g/m (oz/ft)	40 (0.43)	40 (0.43)
	Control		-	Electronic Expansion Valve	
Refrigerant Oil	Type		-	FVC68D	FVC68D
	Charged volume		cc x No.	1,300 x 1	1,300 x 1
Heat Exchanger	(Row x Column x Fins per inch) x No.			(2 x 32 x 14) x 1 + (2 x 22 x 14) x 1	(2 x 32 x 14) x 2
Fan	Type		-	Propeller	Propeller
	Air Flow Rate		m^3/min x No.	45 x 2	55 x 2
Fan Motor	Type			BLDC	BLDC
	Output		W x No.	85.4 x 2	124 x 2
Sound Pressure Level	Cooling	Rated	dB(A)	53	52
	Heating	Rated	dB(A)	54	54
Sound Power Level	Cooling	Max.	dB(A)	66	67
Piping Connections	Liquid	Outer Dia.	mm(inch)	Ø 9.52 (3/8)	Ø 9.52 (3/8)
	Gas	Outer Dia.	mm(inch)	Ø 15.88 (5/8)	Ø 15.88 (5/8)
Piping Length		Max.	m (ft)	50 (164.0)	75 (246.1)
Maximum Height Difference	Outdoor Unit ~ Indoor Unit	Max.	m (ft)	30 (98.4)	30 (98.4)
Operation Range (Outdoor Temperature)	Cooling	Min. ~ Max.	℃ DB (˚F DB)	-15 (5.0) ~ 48 (118.4)	-15 (5.0) ~ 48 (118.4)
	Heating	Min. ~ Max.	℃ WB (˚F WB)	-18 (-0.4) ~ 18 (64.4)	-18 (-0.4) ~ 18 (64.4)

Note

1. Due to our policy of innovation some specifications may be changed without notification.
2. Wiring cable size must comply with the applicable local and national codes. And “Electric characteristics” chapter should be considered for electrical work and design. Especially the power cable and circuit breaker should be selected in accordance with that.
3. Power factor could vary less than ±1% according to the operating conditions.
4. Sound pressure level is measured on the rated condition in the anechoic rooms by ISO 3745 standard.
   Sound power level is measured on the rated condition in the reverberation rooms by ISO 3741 standard.
   Therefore, these values can be increased owing to ambient conditions during operation.
5. Performances are based on the following conditions :
   - *Cooling : Indoot Ambient Temp. 27°CDB / 19°CWB, Outdoor Ambient Temp. 35°CDB / 24°CWB
   - *Heating : Indoot Ambient Temp. 20°CDB / 15°CWB, Outdoor Ambient Temp. 7°CDB / 6°CWB
   - Interconnected Pipe is standard length and difference of Elevation (Outdoor ~ Indoor Unit) is Zero.
6. This product contains Fluorinated greenhouse gases.

3. Specifications

Outdoor unit				AUUW488D2 [UU49W U32]	AUUW608D2 [UU61W U32]
Power Supply			V , Ø , Hz	380-415, 3, 50	380-415, 3, 50
Wiring Connections	Power Supply Cable (included Earth)		No. x mm_2 (AWG)	5C x 2.5 (12)	5C x 2.5 (12)
Casing Color			-	Warm Gray	Warm Gray
Dimensions		W x H x D	mm	950 × 1,380 × 330	950 × 1,380 × 330
Net Weight			kg (lbs)	96.0 (211.6)	96.0 (211.6)
Compressor	Type		-	Twin Rotary	Twin Rotary
	Model		Model x No.	GPT442MAA x 1	GPT442MAA x 1
	Motor type		-	BLDC	BLDC
	Motor Output		W x No.	4,000 x 1	4,000 x 1
Refrigerant	Type		-	R410A	R410A
	Precharged Amount		g (oz)	3,400 (119.9)	3,400 (119.9)
	Chargeless-Pipe Length		m (ft)	7.5 (24.6)	7.5 (24.6)
	Additional Charging Volume		g/m (oz/ft)	40 (0.43)	40 (0.43)
	Control		-	Electronic Expansion Valve	
Refrigerant Oil	Type		-	FVC68D	FVC68D
	Charged volume		cc x No.	1,300 x 1	1,300 x 1
Heat Exchanger	(Row x Column x Fins per inch) x No.			(2 x 32 x 14) x 2	(2 x 32 x 14) x 2
Fan	Type		-	Propeller	Propeller
	Air Flow Rate		m^3/min x No.	55 x 2	55 x 2
Fan Motor	Type			BLDC	BLDC
	Output		W x No.	124 x 2	124 x 2
Sound Pressure Level	Cooling	Rated	dB(A)	52	52
	Heating	Rated	dB(A)	54	54
Sound Power Level	Cooling	Max.	dB(A)	68	71
Piping Connections	Liquid	Outer Dia.	mm(inch)	Ø 9.52 (3/8)	Ø 9.52 (3/8)
	Gas	Outer Dia.	mm(inch)	Ø 15.88 (5/8)	Ø 15.88 (5/8)
Piping Length		Max.	m (ft)	75 (246.1)	75 (246.1)
Maximum Height Difference	Outdoor Unit ~ Indoor Unit	Max.	m (ft)	30 (98.4)	30 (98.4)
Operation Range (Outdoor Temperature)	Cooling	Min. ~ Max.	℃ DB (˚F DB)	-15 (5.0) ~ 48 (118.4)	-15 (5.0) ~ 48 (118.4)
	Heating	Min. ~ Max.	℃ WB (˚F WB)	-18 (-0.4) ~ 18 (64.4)	-18 (-0.4) ~ 18 (64.4)

Note

1. Due to our policy of innovation some specifications may be changed without notification.
2. Wiring cable size must comply with the applicable local and national codes. And “Electric characteristics” chapter should be considered for electrical work and design. Especially the power cable and circuit breaker should be selected in accordance with that.
3. Power factor could vary less than ±1% according to the operating conditions.
4. Sound pressure level is measured on the rated condition in the anechoic rooms by ISO 3745 standard.
   Sound power level is measured on the rated condition in the reverberation rooms by ISO 3741 standard.
   Therefore, these values can be increased owing to ambient conditions during operation.
5. Performances are based on the following conditions :
   - *Cooling : Indoot Ambient Temp. 27°CDB / 19°CWB, Outdoor Ambient Temp. 35°CDB / 24°CWB
   - *Heating : Indoot Ambient Temp. 20°CDB / 15°CWB, Outdoor Ambient Temp. 7°CDB / 6°CWB
   - Interconnected Pipe is standard length and difference of Elevation (Outdoor ~ Indoor Unit) is Zero.
6. This product contains Fluorinated greenhouse gases.

3. Specifications

Outdoor unit				AUUW70LAE [UU70W U34]	AUUW85LAE [UU85W U74]
Power Supply			V , Ø , Hz	380-415, 3, 50	380-415, 3, 50
Wiring Connections	Power Supply Cable (included Earth)		No. x mm^2 (AWG)	5C x 2.5 (12)	5C x 2.5 (12)
Casing Color			-	Warm Gray	Warm Gray
Dimensions		W x H x D	mm	950 × 1,380 × 330	1,090 × 1,625 × 380
Net Weight			kg (lbs)	110.0 (242.0)	144.0 (317.0)
Compressor	Type		-	Hermetically Sealed Scroll	Hermetically Sealed Scroll
	Model		Model x No.	JBA048MAF x 1	JBA068MAF x 1
	Motor type		-	BLDC	BLDC
	Motor Output		W x No.	4,200 x 1	6,800 x 1
Refrigerant	Type		-	R410A	R410A
	Precharged Amount		g (oz)	5,200 (183.4)	5,500 (194.0)
	Chargeless-Pipe Length		m (ft)	25 (82.0)	15 (49.2)
	Additional Charging Volume		g/m (oz/ft)	70 (0.75)	70 (0.75)
	Control		-	Electronic Expansion Valve	
Refrigerant Oil	Type		-	FVC68D	FVC68D
	Charged volume		cc x No.	1,200 x 1	1,400 x 1
Heat Exchanger	(Row x Column x Fins per inch) x No.			(2 x 38 x 14) x 2 + (1 x 38 x 14) x 1	(2 x 38 x 14) x 2
Fan	Type		-	Axial Flow Fan	Axial Flow Fan
	Air Flow Rate		m^3/min x No.	55 x 2	58 x 2
Fan Motor	Type			BLDC	BLDC
	Output		W x No.	124.0 x 2	250.0 x 2
Sound Pressure Level	Cooling	Rated	dB(A)	55	59
	Heating	Rated	dB(A)	58	60
Sound Power Level	Cooling	Max.	dB(A)	73	74
Piping Connections	Liquid	Outer Dia.	mm(inch)	Ø 9.52 (3/8)	Ø 12.7 (1/2)
	Gas	Outer Dia.	mm(inch)	Ø 25.4 (1/1)	Ø 22.2 (7/8)
Piping Length		Max.	m (ft)	75 (246.0)	75 (246.0)
Maximum Height Difference	Outdoor Unit ~ Indoor Unit	Max.	m (ft)	30 (98.4)	30 (98.4)
Operation Range (Outdoor Temperature)	Cooling	Min. ~ Max.	℃ DB (˚F DB)	-20 (-4) ~ 48 (118.4)	-20 (-4) ~ 48 (118.4)
	Heating	Min. ~ Max.	℃ WB (˚F WB)	-18 (-0.4) ~ 18 (64.4)	-18 (-0.4) ~ 18 (64.4)

Note

1. Due to our policy of innovation some specifications may be changed without notification.
2. Wiring cable size must comply with the applicable local and national codes. And “Electric characteristics” chapter should be considered for electrical work and design. Especially the power cable and circuit breaker should be selected in accordance with that.
3. Power factor could vary less than ±1% according to the operating conditions.
4. Sound pressure level is measured on the rated condition in the anechoic rooms by ISO 3745 standard.
   Sound power level is measured on the rated condition in the reverberation rooms by ISO 3741 standard.
   Therefore, these values can be increased owing to ambient conditions during operation.
5. Performances are based on the following conditions :
   - *Cooling : Indoot Ambient Temp. 27°CDB / 19°CWB, Outdoor Ambient Temp. 35°CDB / 24°CWB
   - *Heating : Indoot Ambient Temp. 20°CDB / 15°CWB, Outdoor Ambient Temp. 7°CDB / 6°CWB
   - Interconnected Pipe is standard length and difference of Elevation (Outdoor ~ Indoor Unit) is Zero.
6. This product contains Fluorinated greenhouse gases.

4. Dimensions

AUUW096D [UU09W ULD] / AUUW126D [UU12W ULD]

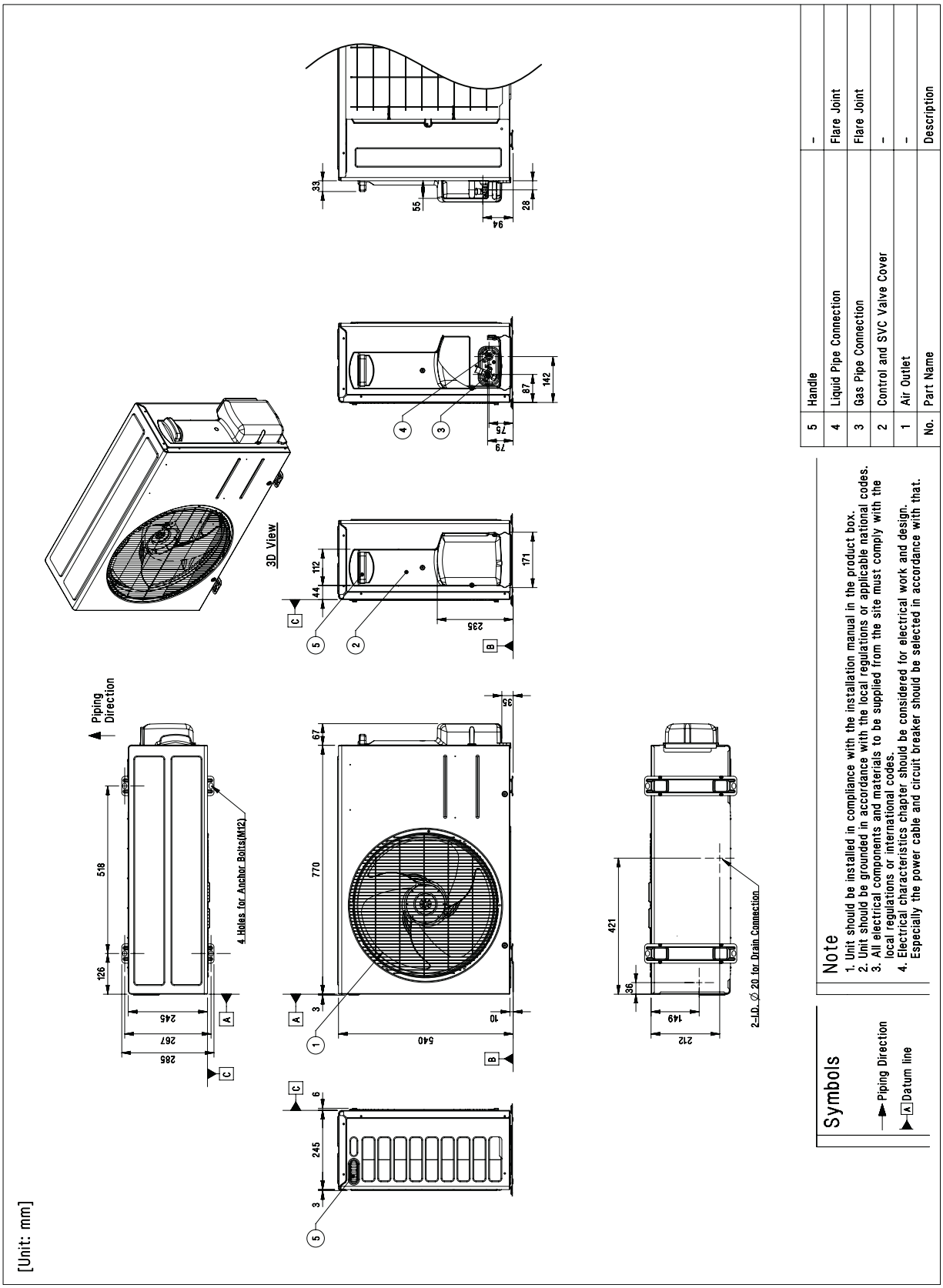

No.	Part Name	Description
5	Handle	-
4	Liquid Pipe Connection	Flare Joint
3	Gas Pipe Connection	Flare Joint
2	Control and SVC Valve Cover	-
1	Air Outlet	-

4. Dimensions

AUUW 18GAE [UU18W UE4]

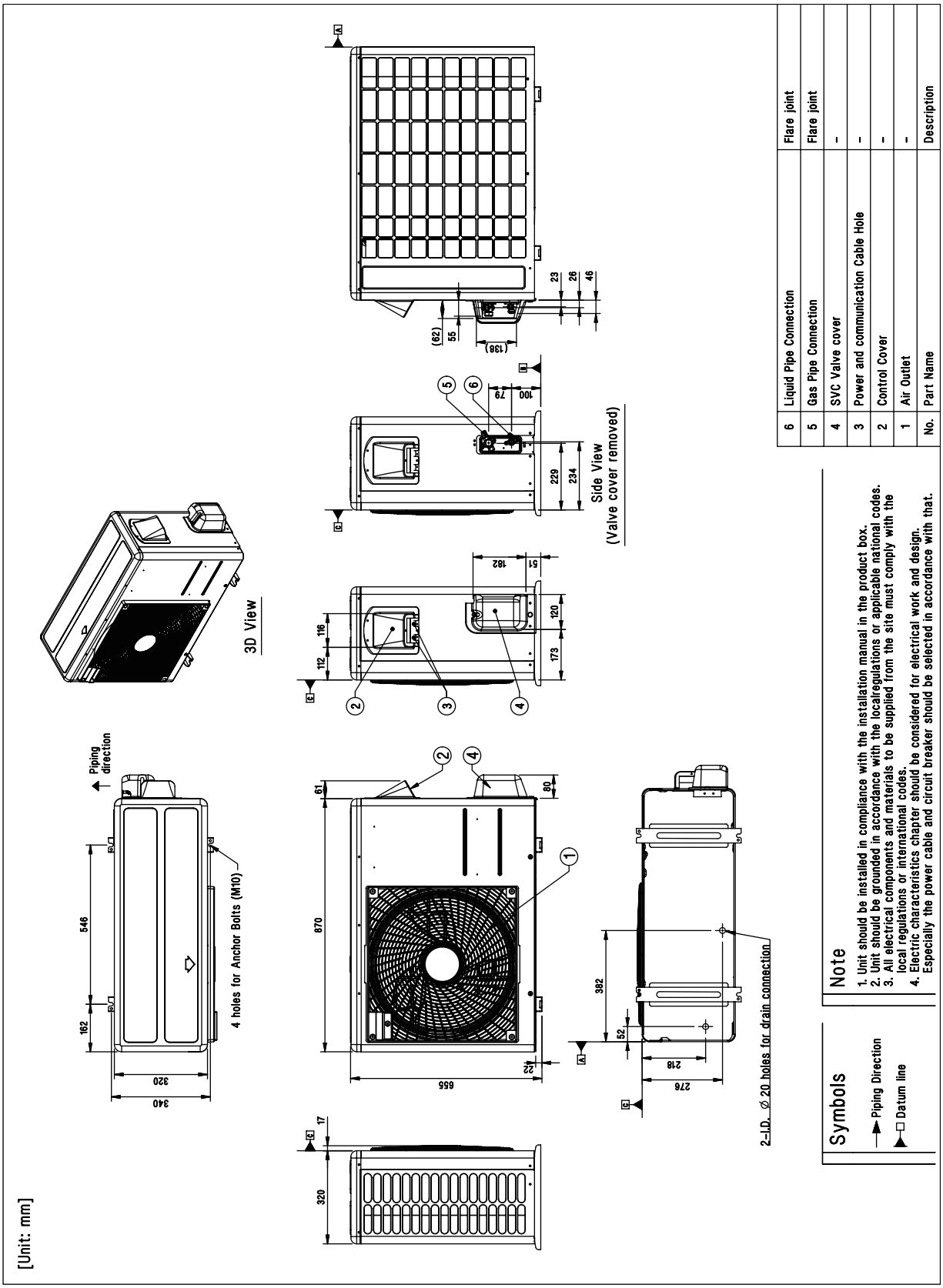

No.	Part Name	Description
6	Liquid Pipe Connection	Flare joint
5	Gas Pipe Connection	Flare joint
4	SVC Valve cover	-
3	Power and communication Cable Hole	-
2	Control Cover	-
1	Air Outlet	-

4. Dimensions

AUUW24GAE [UU24W U44] / AUUW30GAE [UU30W U44]

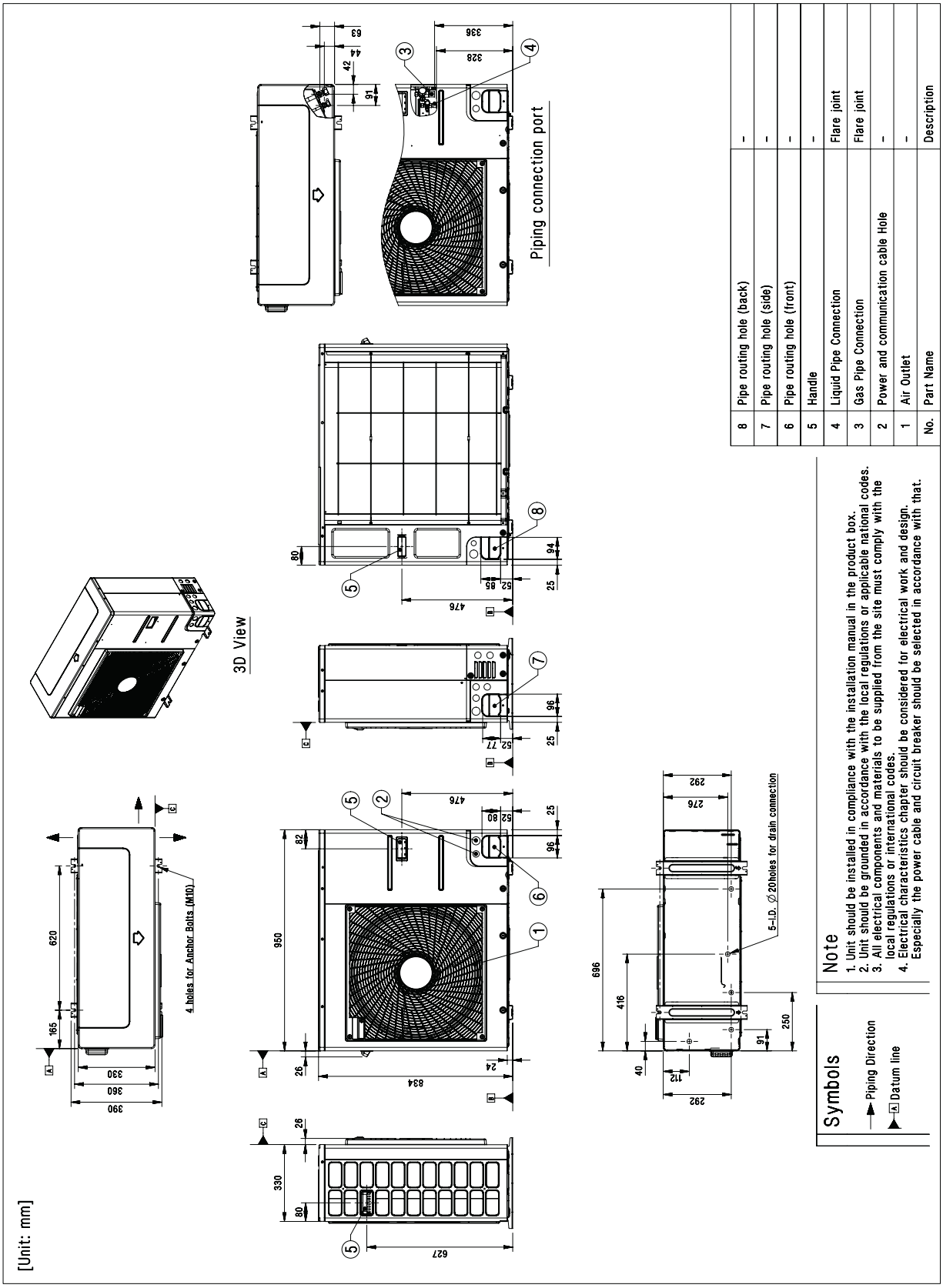

No.	Part Name	Description
8	Pipe routing hole (back)	-
7	Pipe routing hole (side)	-
6	Pipe routing hole (front)	-
5	Handle	-
4	Liquid Pipe Connection	Flare joint
3	Gas Pipe Connection	Flare joint
2	Power and communication cable Hole	-
1	Air Outlet	-

4. Dimensions

AUUW366D2 [UU36W UO2] / AUUW368D2 [UU37W UO2]

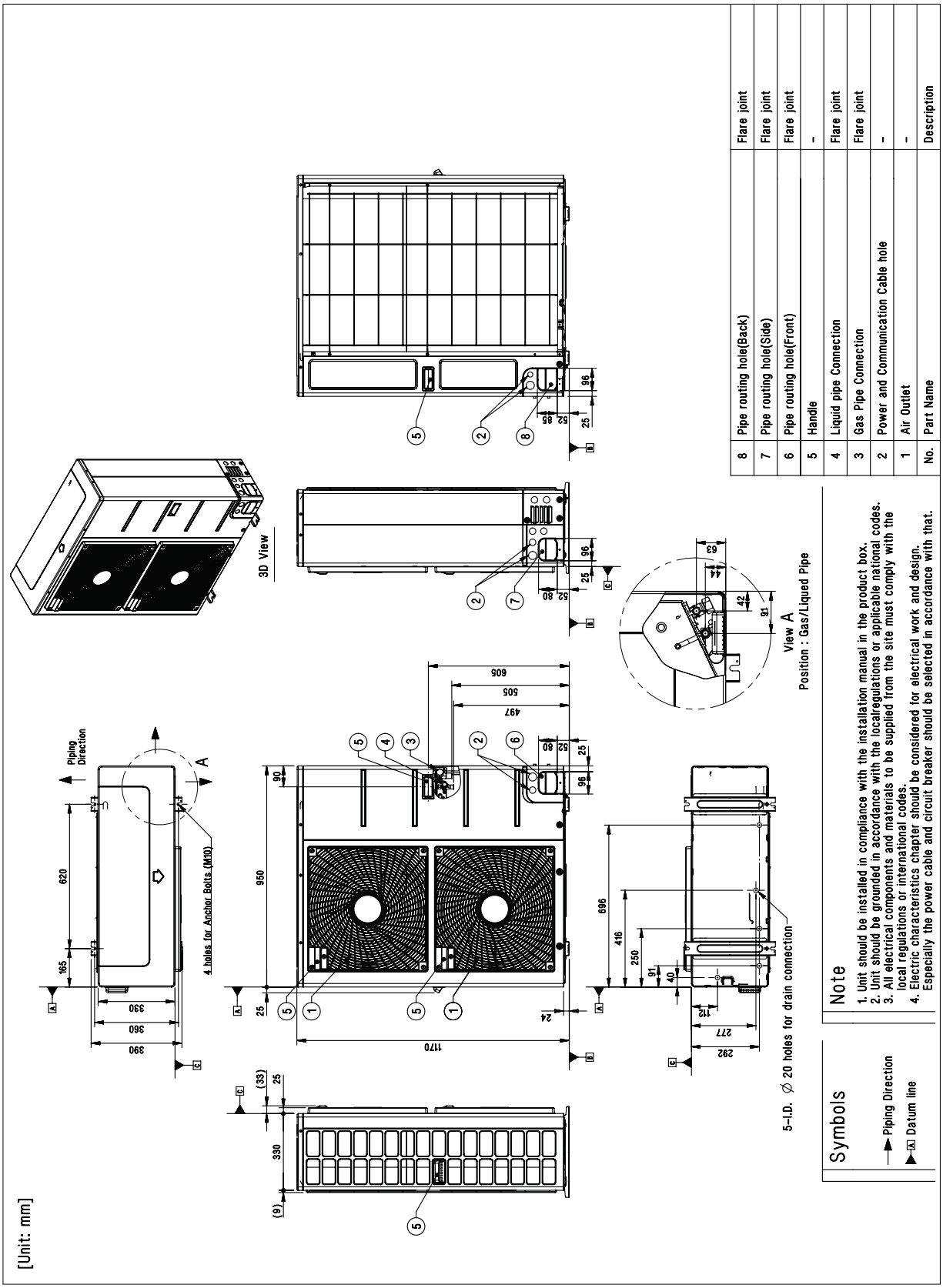

No.	Part Name	Description
8	Pipe routing hole(Back)	Flare joint
7	Pipe routing hole(Side)	Flare joint
6	Pipe routing hole(Front)	Flare joint
5	Handle	-
4	Liquid pipe Connection	Flare joint
3	Gas Pipe Connection	Flare joint
2	Power and Communication Cable hole	-
1	Air Outlet	-

4. Dimensions

AUUW426D2 [UU42W U32] / AUUW486D2 [UU48W U32] / AUUW606D2 [UU60W U32]
AUUW428D2 [UU43W U32] / AUUW488D2 [UU49W U32] / AUUW608D2 [UU61W U32]
AUUW70LAE [UU70W U34]

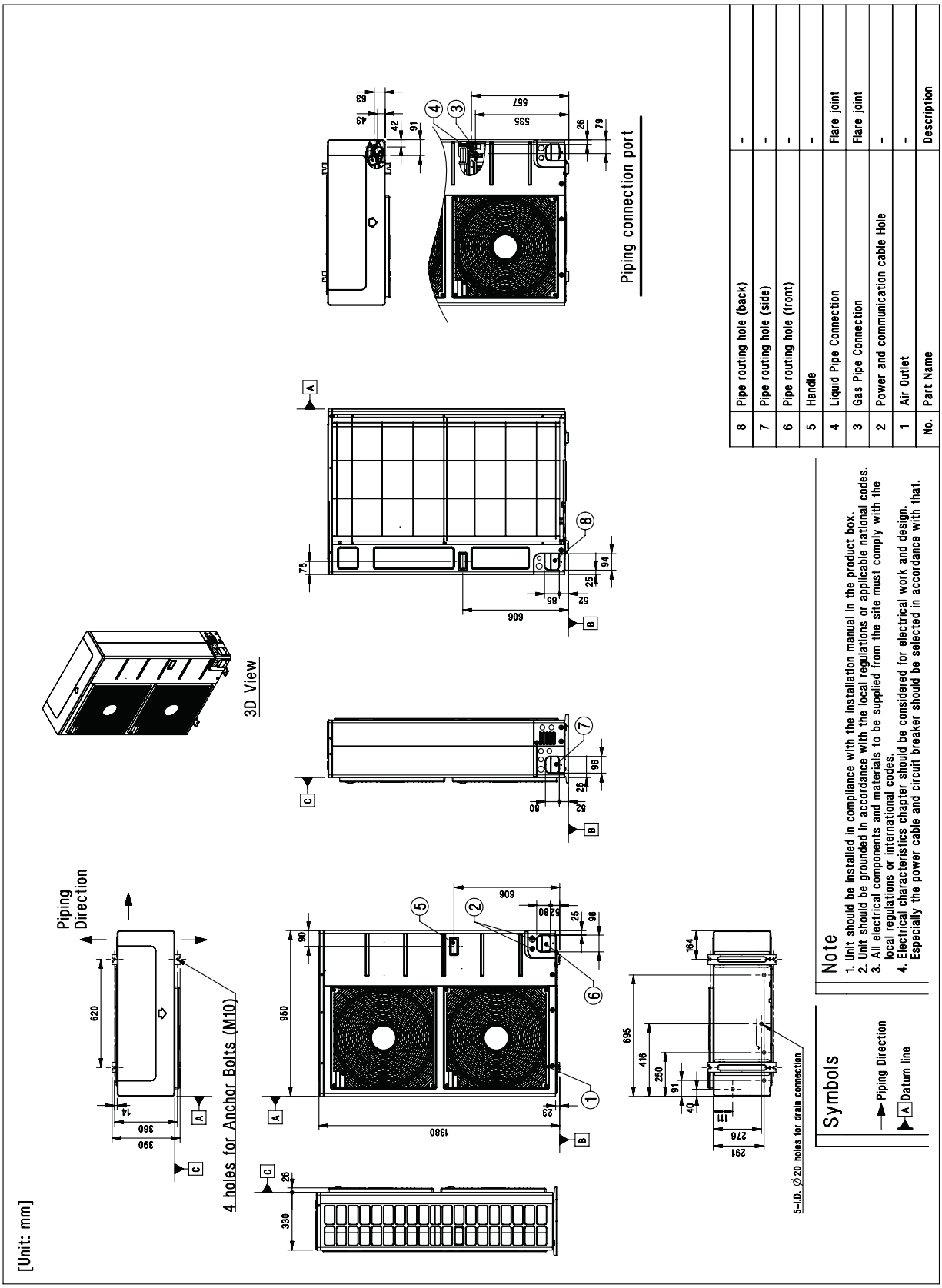

No.	Part Name	Description
1	Air Outlet	-
2	Power and communication cable Hole	-
3	Gas Pipe Connection	Flare joint
4	Liquid Pipe Connection	Flare joint
5	Handle	-
6	Pipe routing hole (front)	-
7	Pipe routing hole (side)	-
8	Pipe routing hole (back)	-

4. Dimensions

AUUW85LAE [UU85W U74]

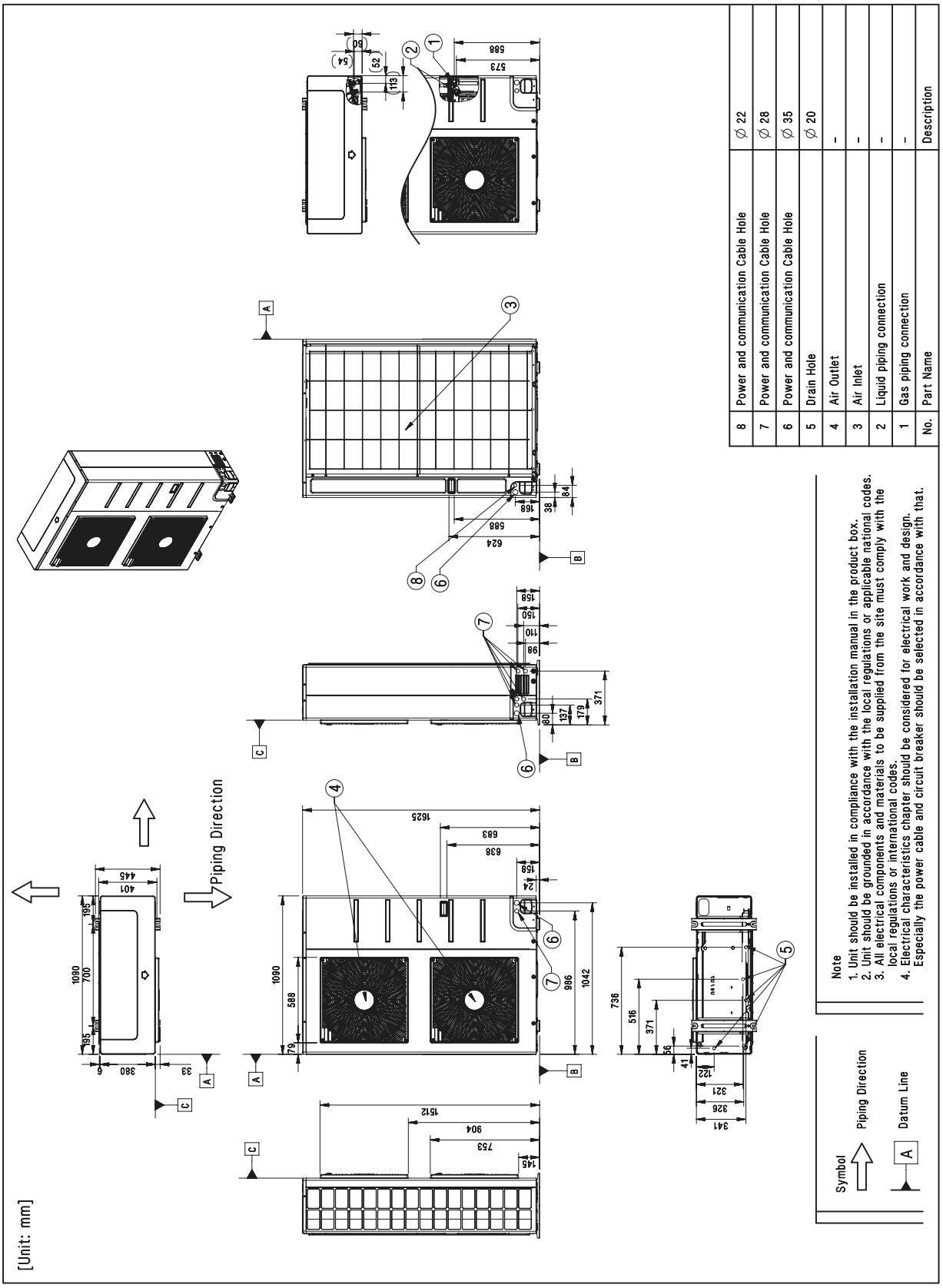

No.	Part Name	Description
8	Power and communication Cable Hole	∅ 22
7	Power and communication Cable Hole	∅ 28
6	Power and communication Cable Hole	∅ 35
5	Drain Hole	∅ 20
4	Air Outlet	-
3	Air Inlet	-
2	Liquid piping connection	-
1	Gas piping connection	-

5. Piping diagrams

◆ AUUW096D [UU09W ULD], AUUW126D [UU12W ULD]

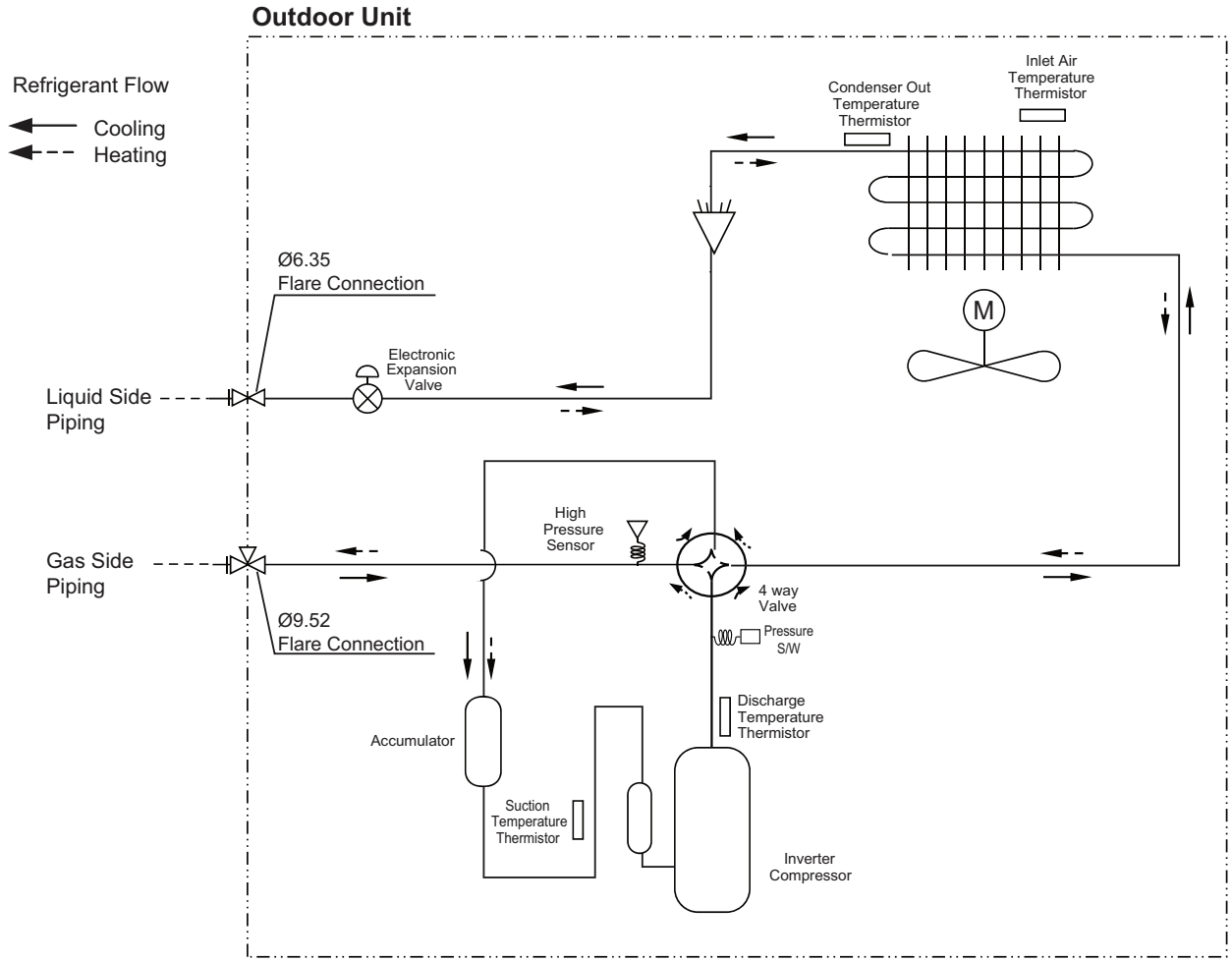

Description	PCB Connector
Suction Temperature Thermistor	CN_TH2
Discharge Temperature Thermistor	
Condenser Out Temperature Thermistor	CN_TH1
Inlet Air Temperature Thermistor	

5. Piping diagrams

◆ AUUW18GAE [UU18W UE4], AUUW24GAE [UU24W U44], AUUW30GAE [UU30W U44]

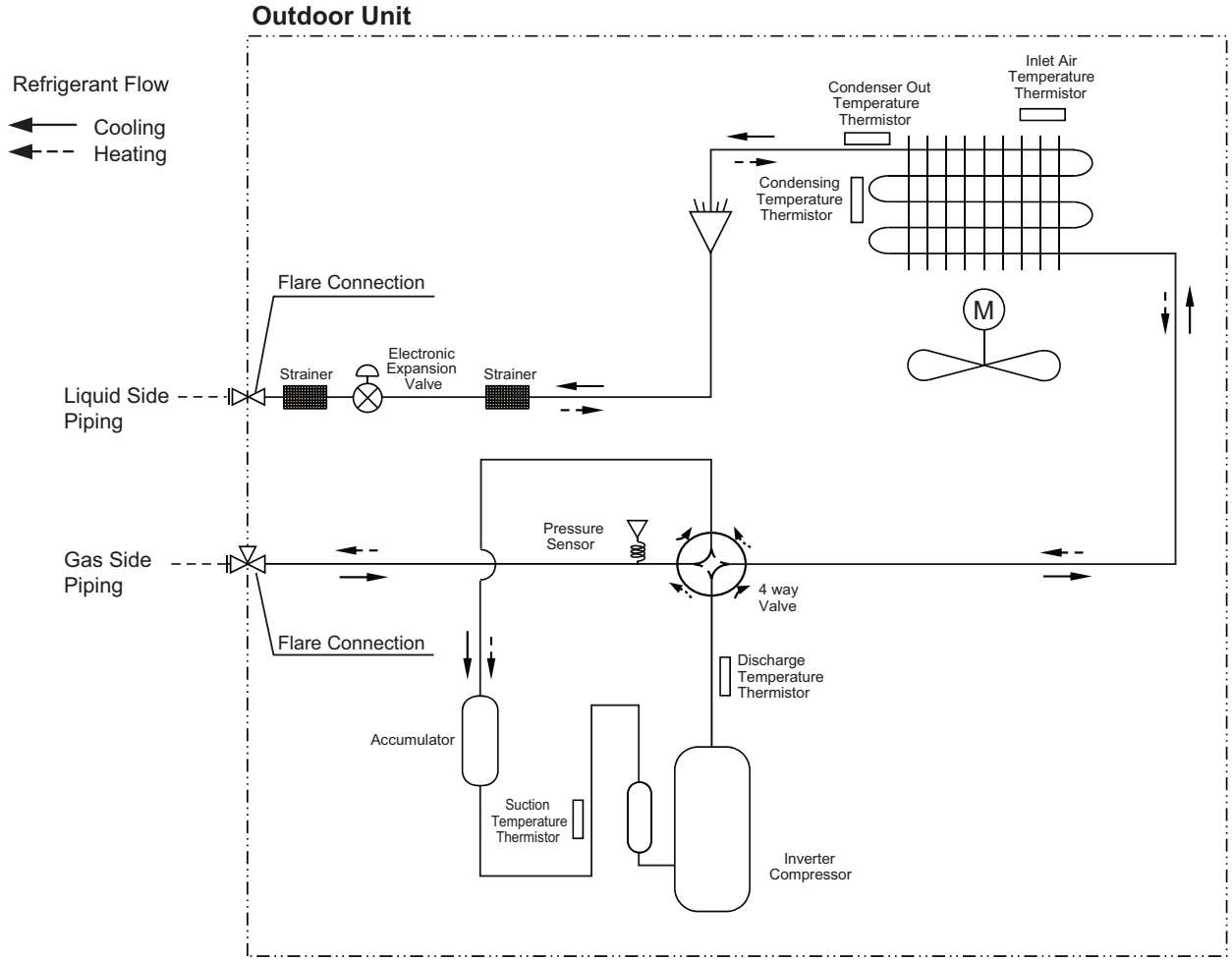

Description	PCB Connector
Suction Temperature Thermistor	CN_TH3
Discharge Temperature Thermistor	
Condenser Out Temperature Thermistor	CN_TH2
Inlet Air Temperature Thermistor	
Condensing Temperature Thermistor	CN_TH4
Pressure Sensor	CN_TH1

■ Refrigerant pipe connection port diameters

Model	Gas	Liquid
AUUW18GAE [UU18W UE4]	Ø12.7	Ø6.35
AUUW24GAE [UU24W U44]	Ø15.88	Ø9.52
AUUW30GAE [UU30W U44]		

5. Piping diagrams

◆ AUUW366D2 [UU36W UO2]

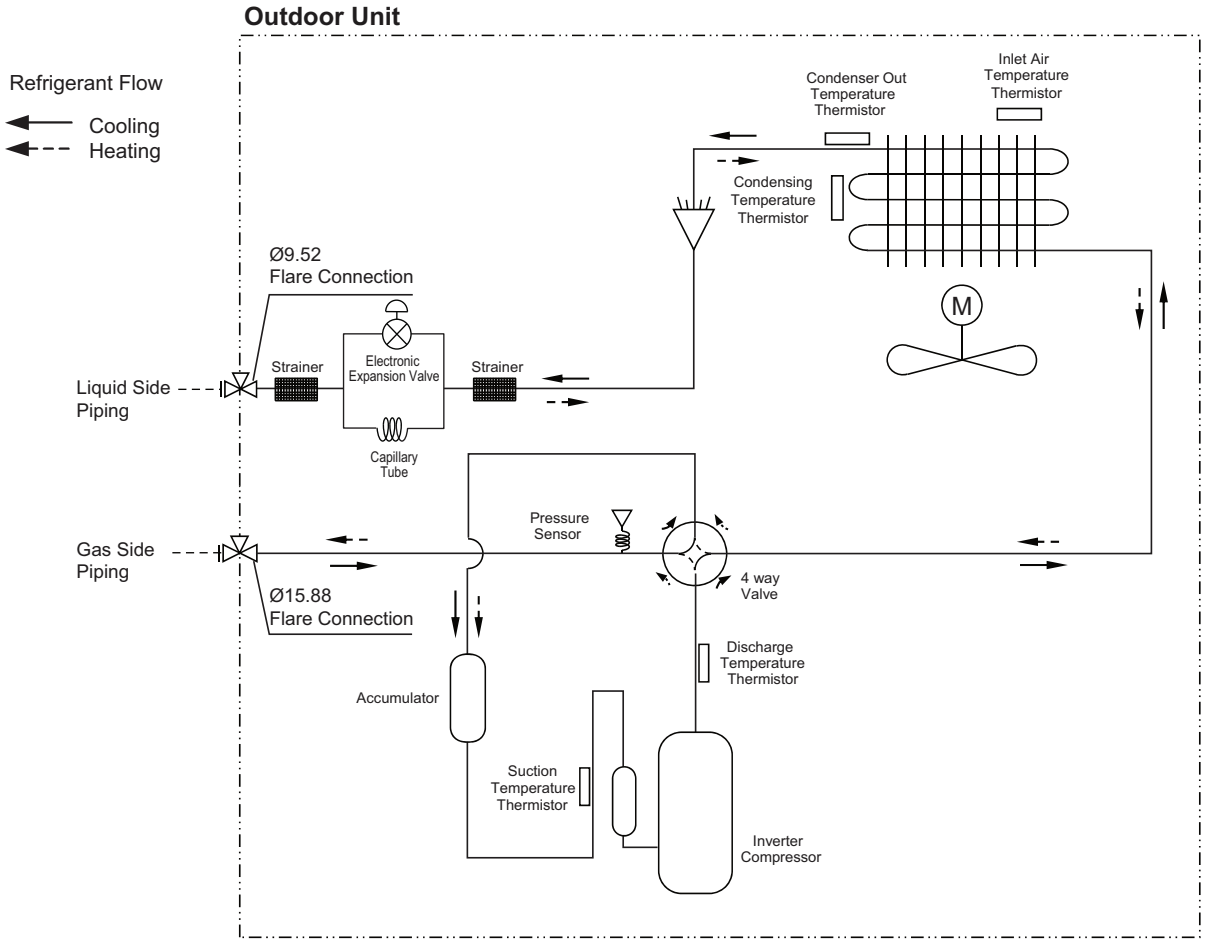

Description	PCB Connector
Suction Temperature Thermistor	CN_TH3
Discharge Temperature Thermistor	
Condenser Out Temperature Thermistor	CN_TH2
Inlet Air Temperature Thermistor	
Condensing Temperature Thermistor	CN_TH4
Pressure Sensor	P-SENSOR(H)

5. Piping diagrams

◆ AUUW368D2 [UU37W UO2]

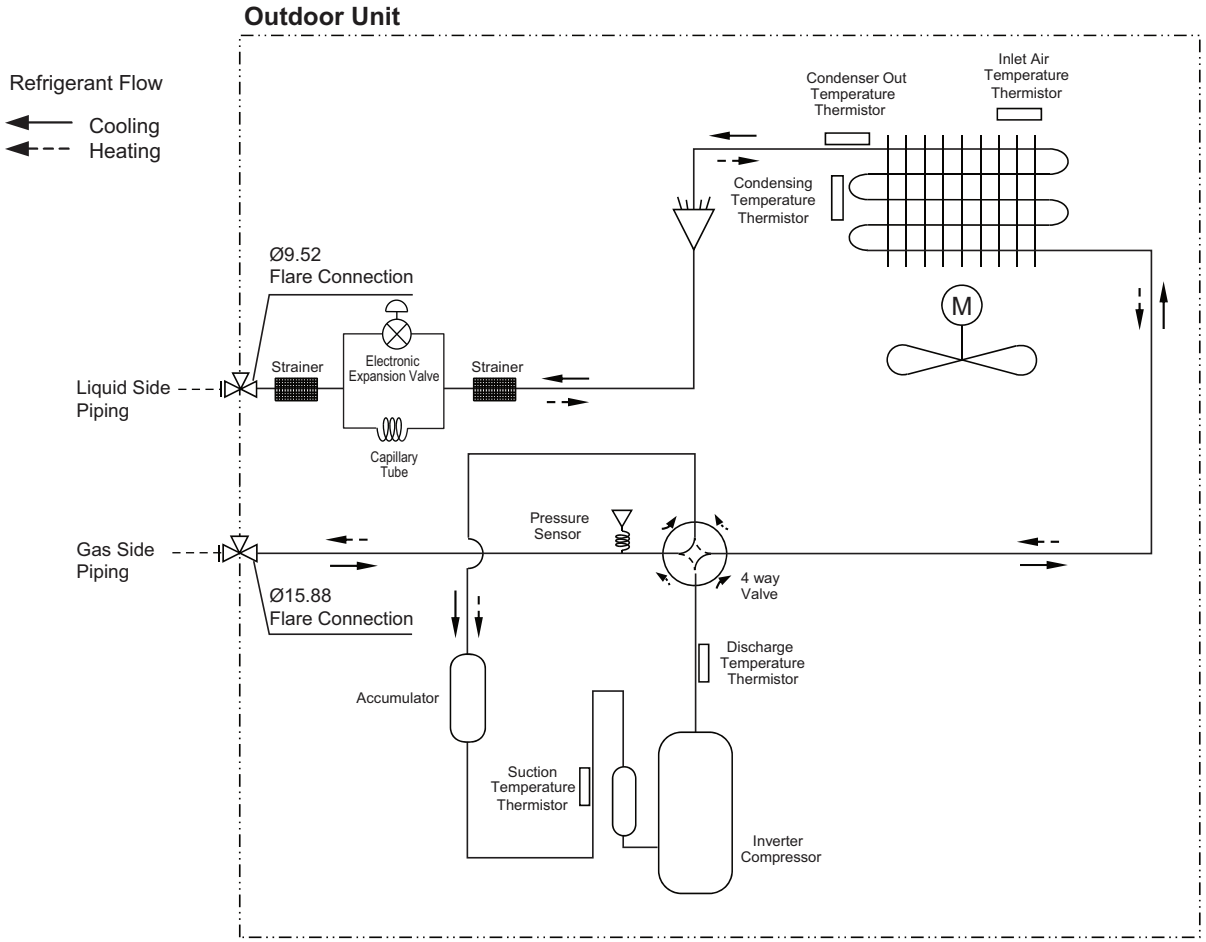

Description	PCB Connector
Suction Temperature Thermistor	CN_TH2
Discharge Temperature Thermistor	
Condenser Out Temperature Thermistor	CN_TH1
Inlet Air Temperature Thermistor	
Condensing Temperature Thermistor	CN_TH3
Pressure Sensor	P-SENSOR(H)

5. Piping diagrams

◆ AUUW426D2 [UU42W U32], AUUW486D2 [UU48W U32], AUUW606D2 [UU60W U32]

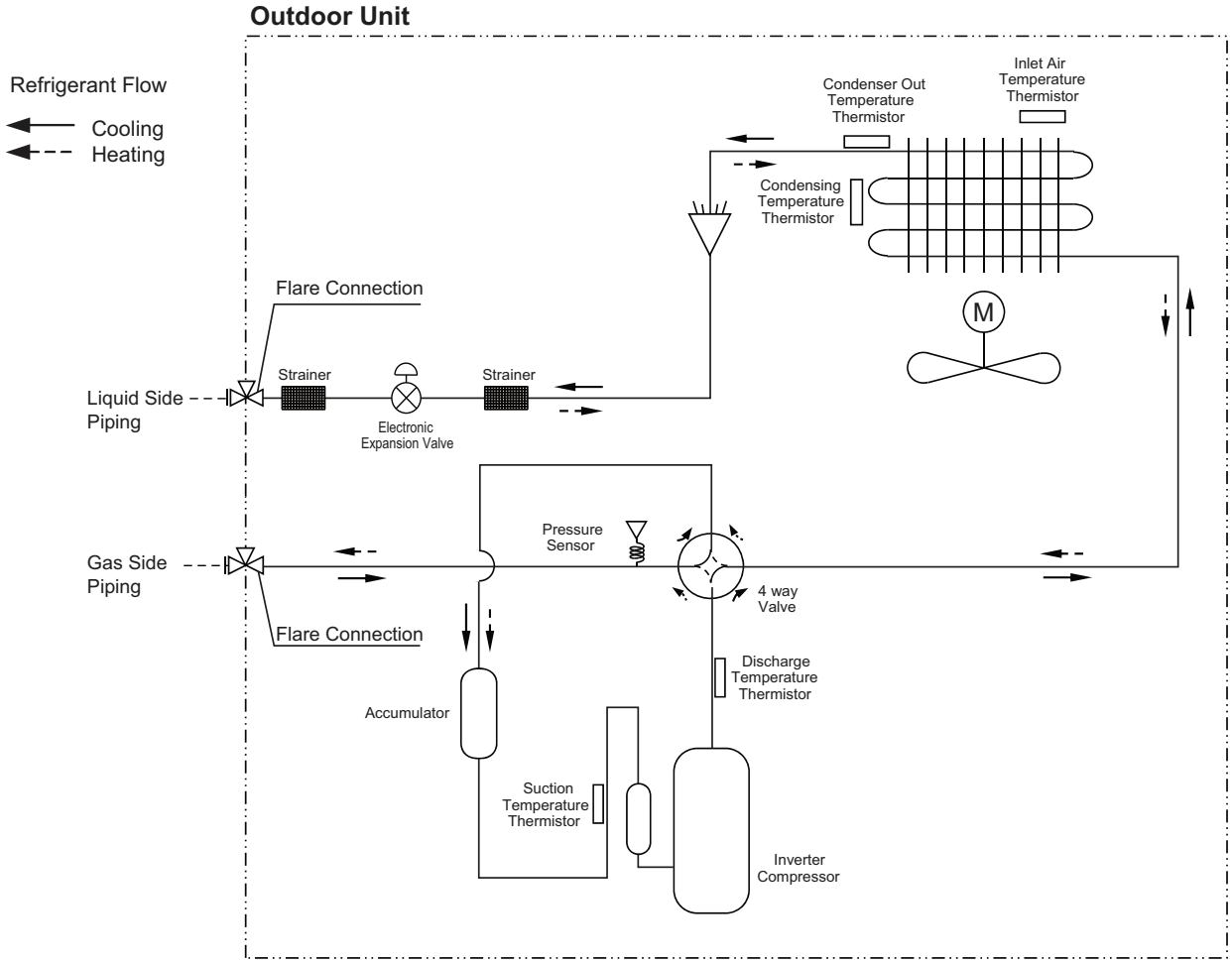

Description	PCB Connector
Suction Temperature Thermistor	CN_TH3
Discharge Temperature Thermistor	
Condenser Out Temperature Thermistor	CN_TH2
Inlet Air Temperature Thermistor	
Condensing Temperature Thermistor	CN_TH4
Pressure Sensor	P-SENSOR(H)

5. Piping diagrams

◆ AUUW428D2 [UU43W U32], AUUW488D2 [UU49W U32], AUUW608D2 [UU61W U32]

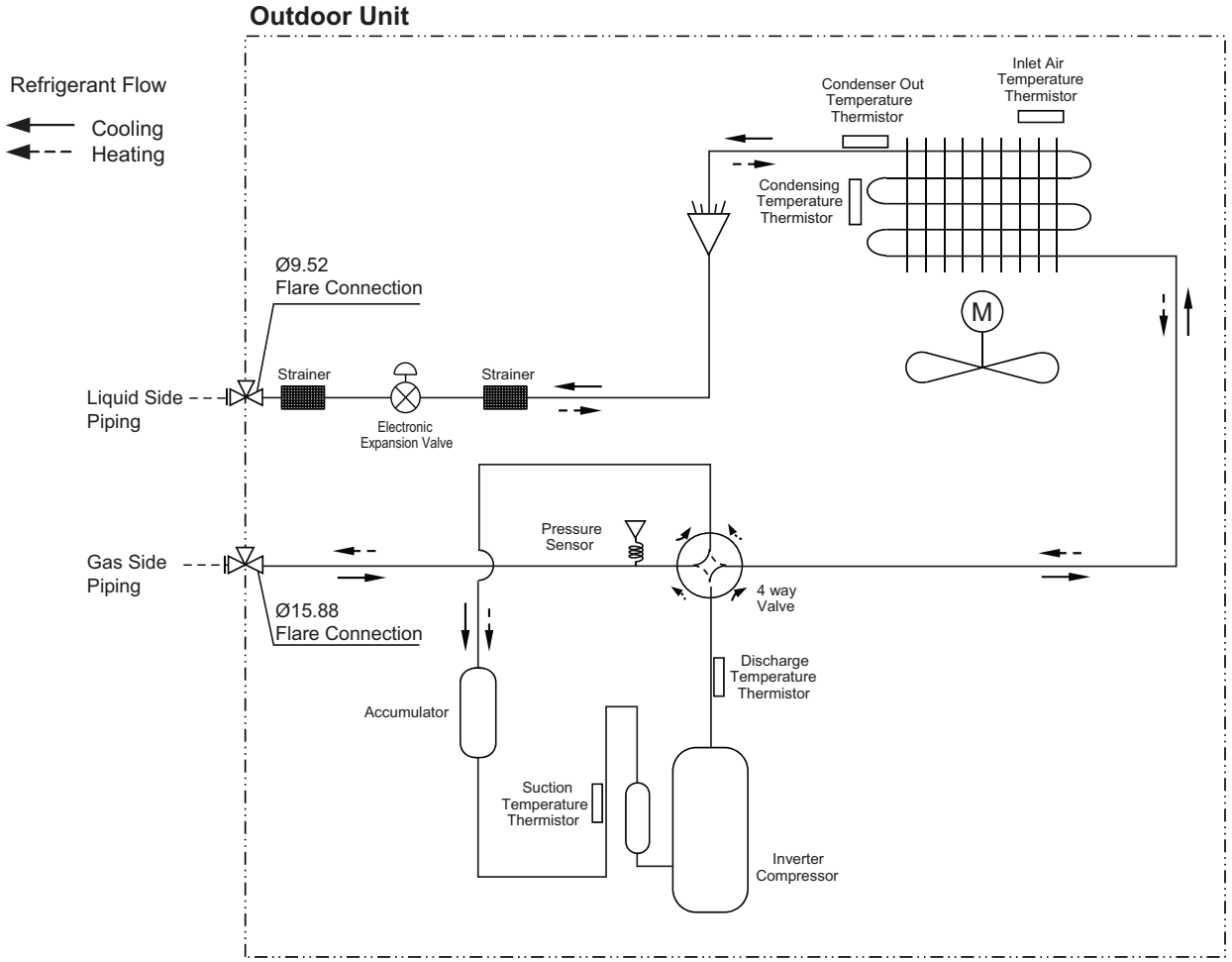

Description	PCB Connector
Suction Temperature Thermistor	CN_TH2
Discharge Temperature Thermistor	
Condenser Out Temperature Thermistor	CN_TH1
Inlet Air Temperature Thermistor	
Condensing Temperature Thermistor	CN_TH3
Pressure Sensor	P-SENSOR(H)

5. Piping diagrams

◆ AUUW70LAE [UU70W U34]

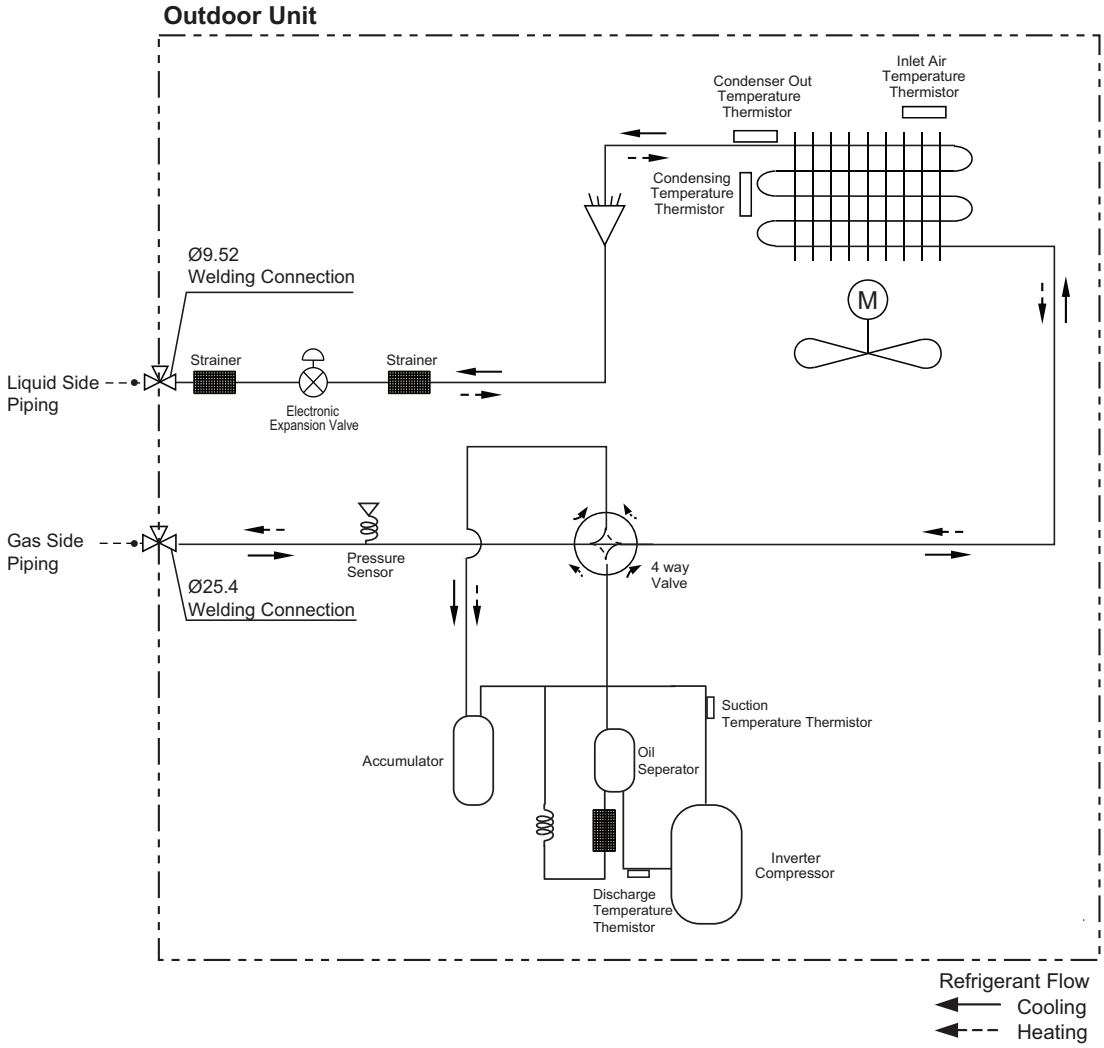

Description	PCB Connector
Suction Temperature Thermistor	CN_SUCTION
Discharge Temperature Themistor	CN_DISCHA
Condenser Out Temperature Themistor	CN_C_PIPE
Inlet Air Temperature Thermistor	CN_AIR
Condensing Temperature Thermistor	CN_MID
Pressure Sensor	CN_H_PRESS

5. Piping diagrams

◆ AUUW85LAE [UU85W U74]

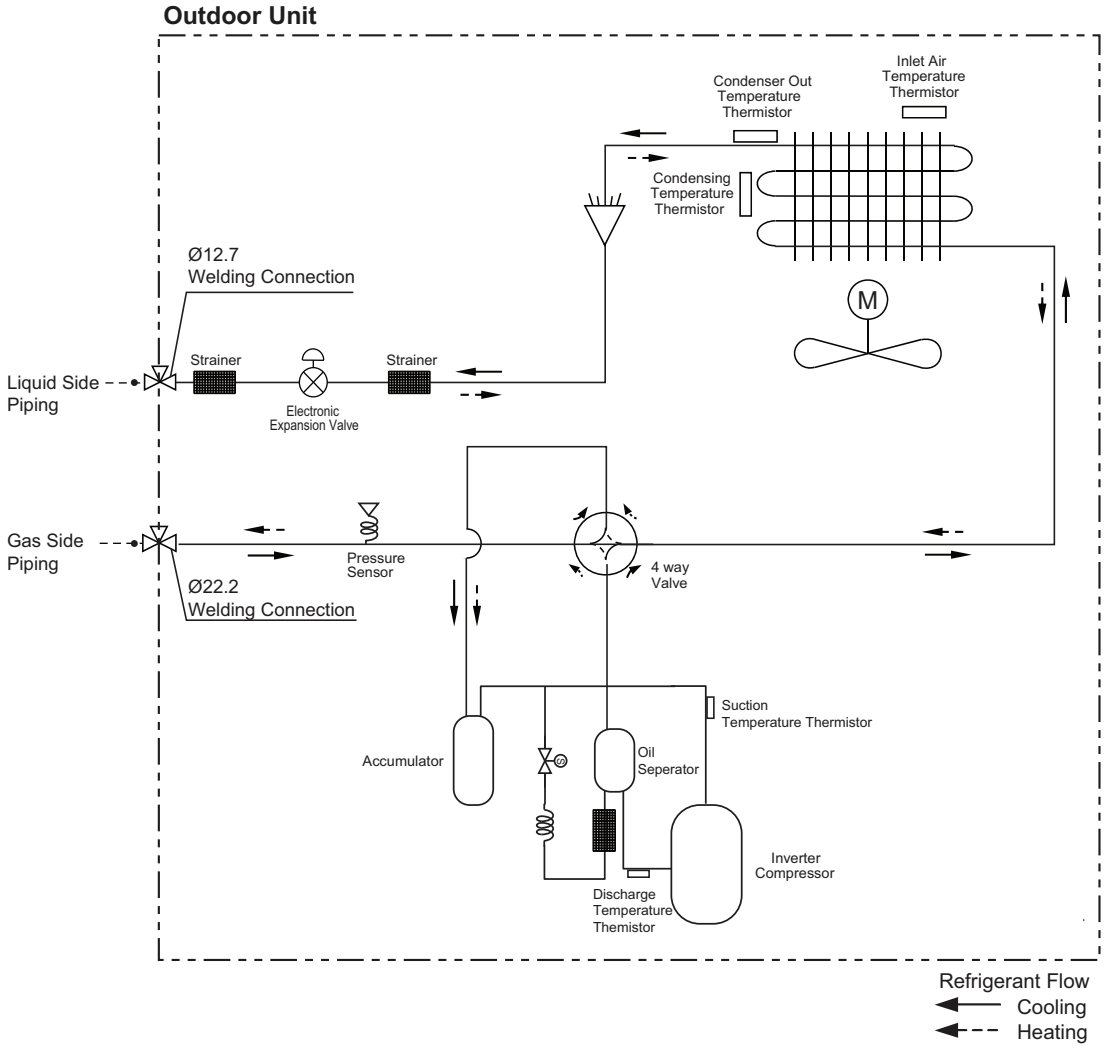

Description	PCB Connector
Suction Temperature Thermistor	CN_SUCTION
Discharge Temperature Themistor	CN_DISCHA
Condenser Out Temperature Themistor	CN_C_PIPE
Inlet Air Temperature Thermistor	CN_AIR
Condensing Temperature Thermistor	CN_MID
Pressure Sensor	CN_H_PRESS

6. Wiring diagrams

◆ AUUW096D [UU09W ULD], AUUW126D [UU12W ULD]

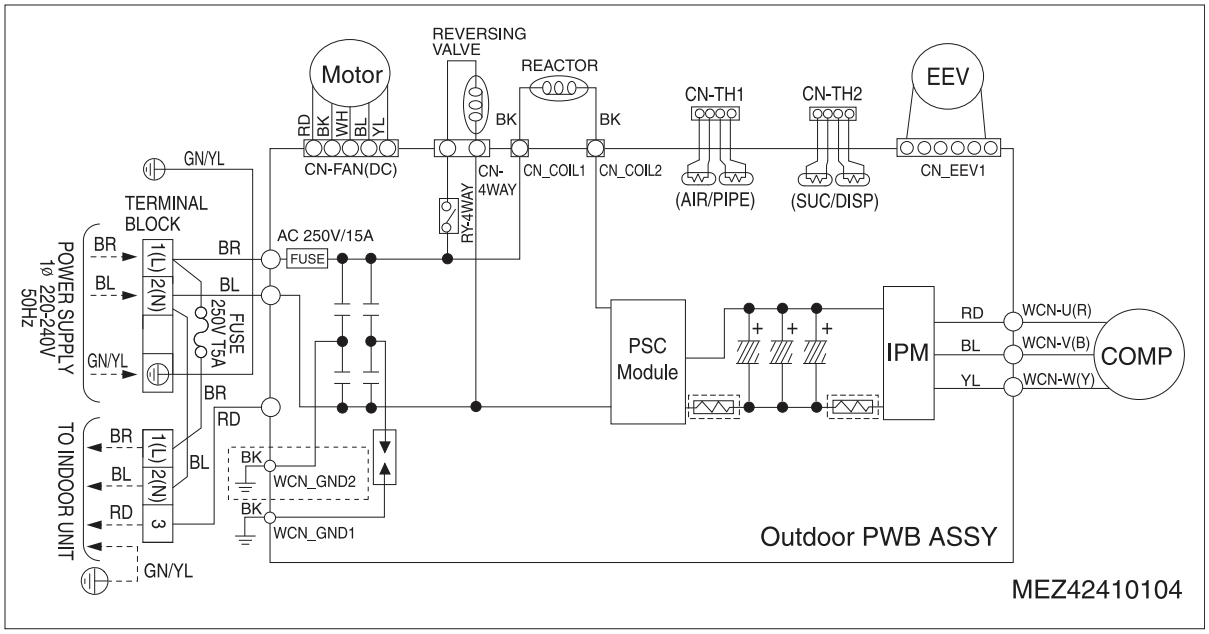

6. Wiring diagrams

◆ AUUW18GAE [UU18W UE4]

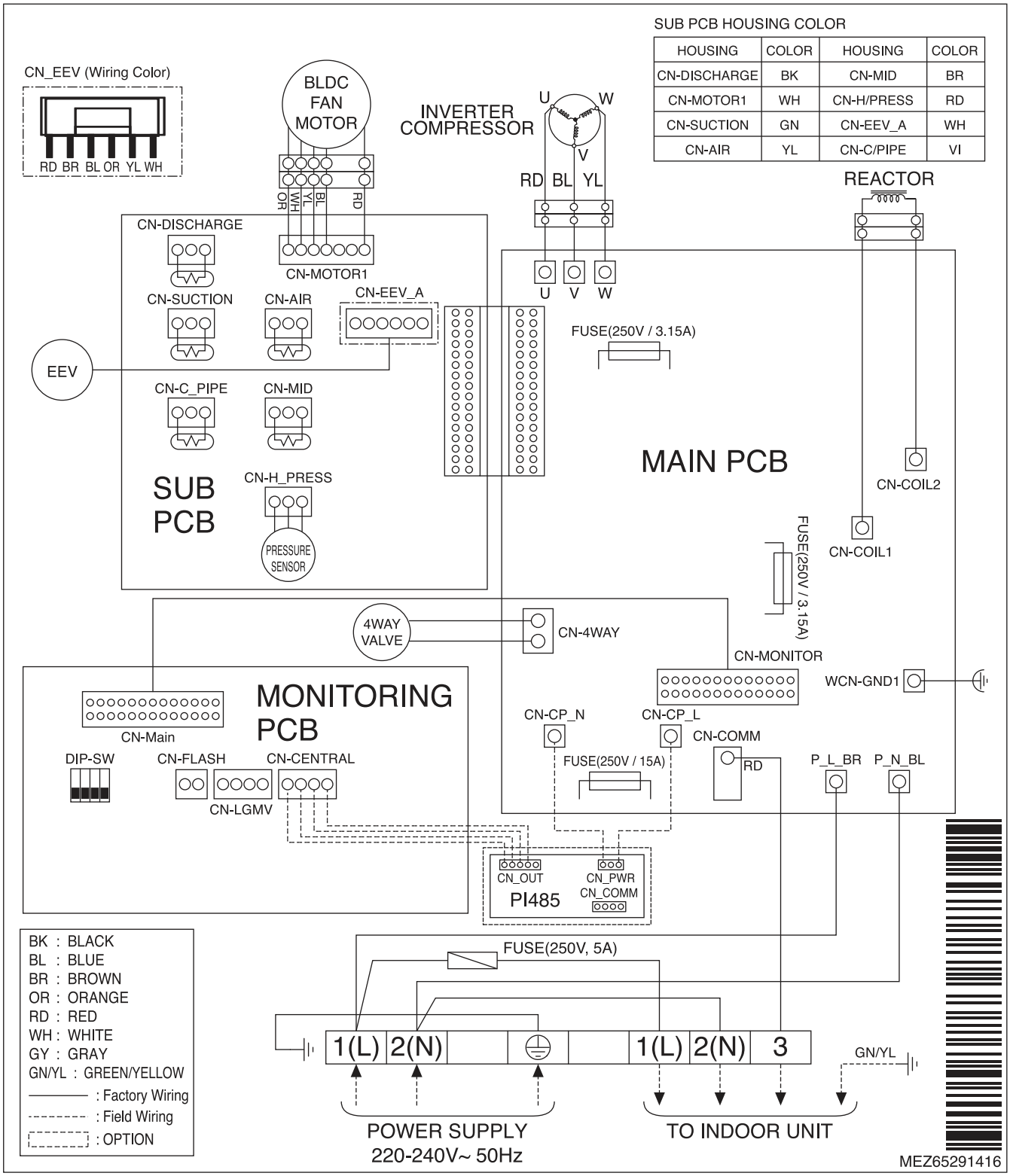

6. Wiring diagrams

◆ AUUW24GAE [UU24W U44] , AUUW30GAE [UU30W U44]

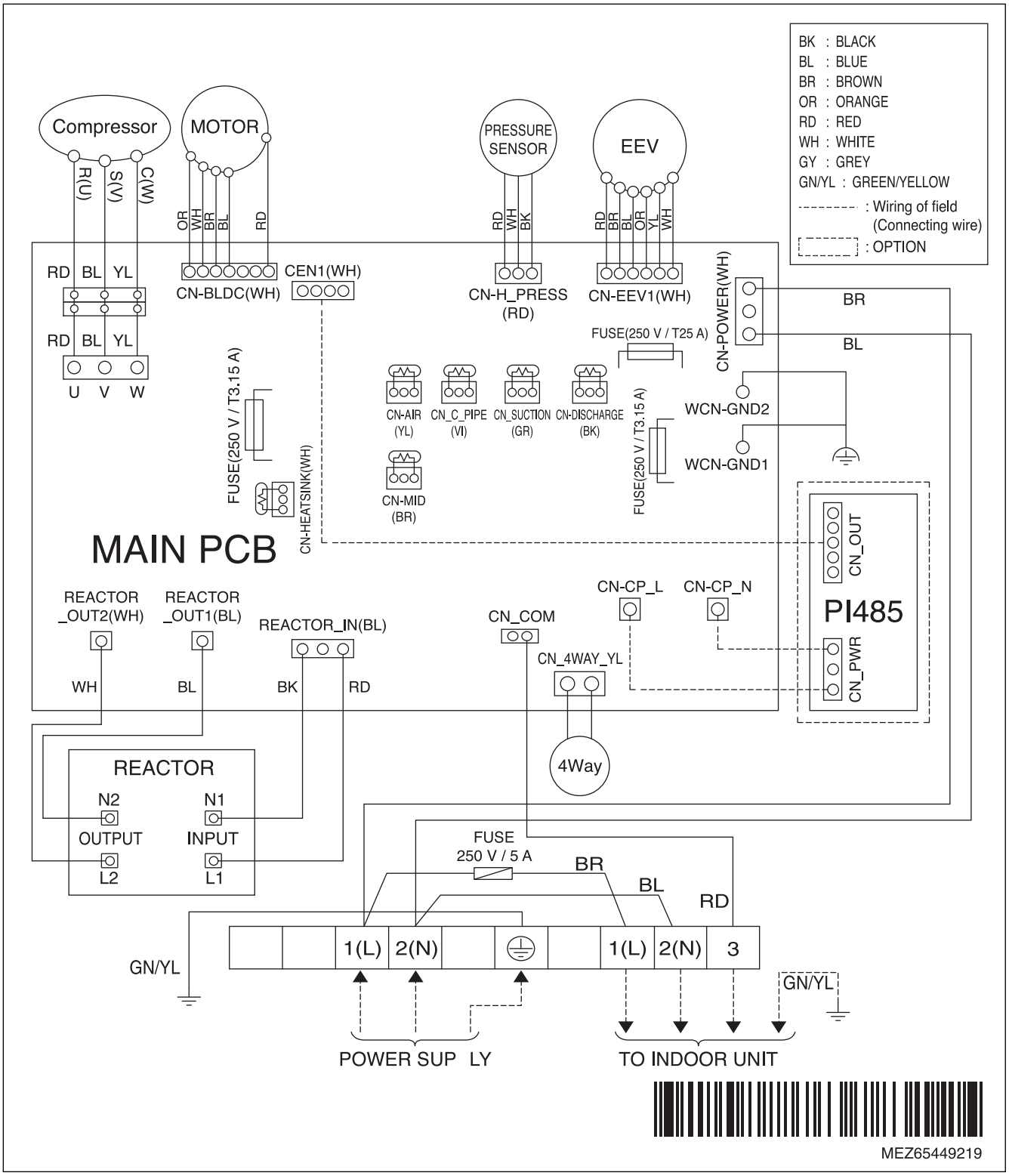

6. Wiring diagrams

◆ AUUW366D2 [UU36W UO2]

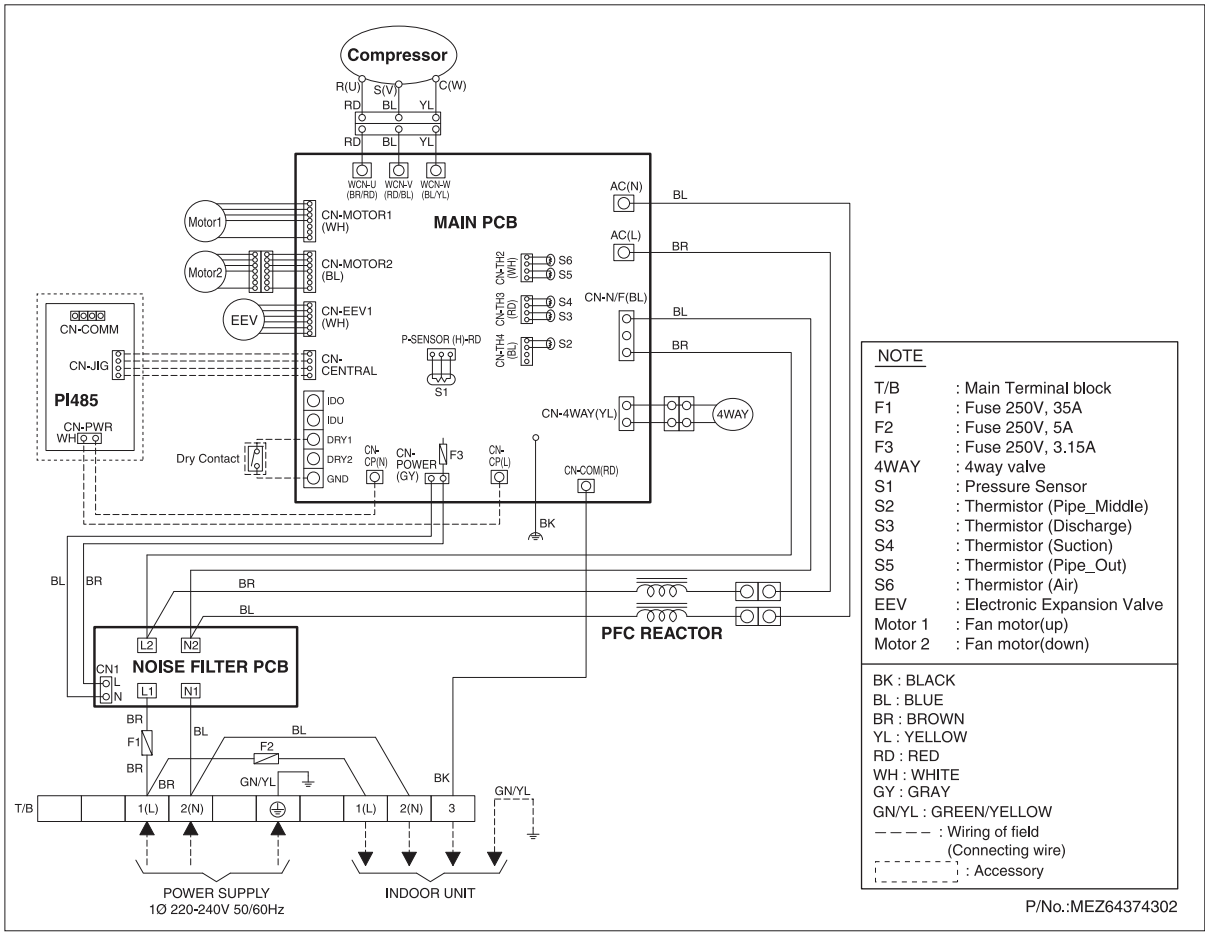

6. Wiring diagrams

◆ AUUW426D2 [UU42W U32], AUUW486D2 [UU48W U32], AUUW606D2 [UU60W U32]

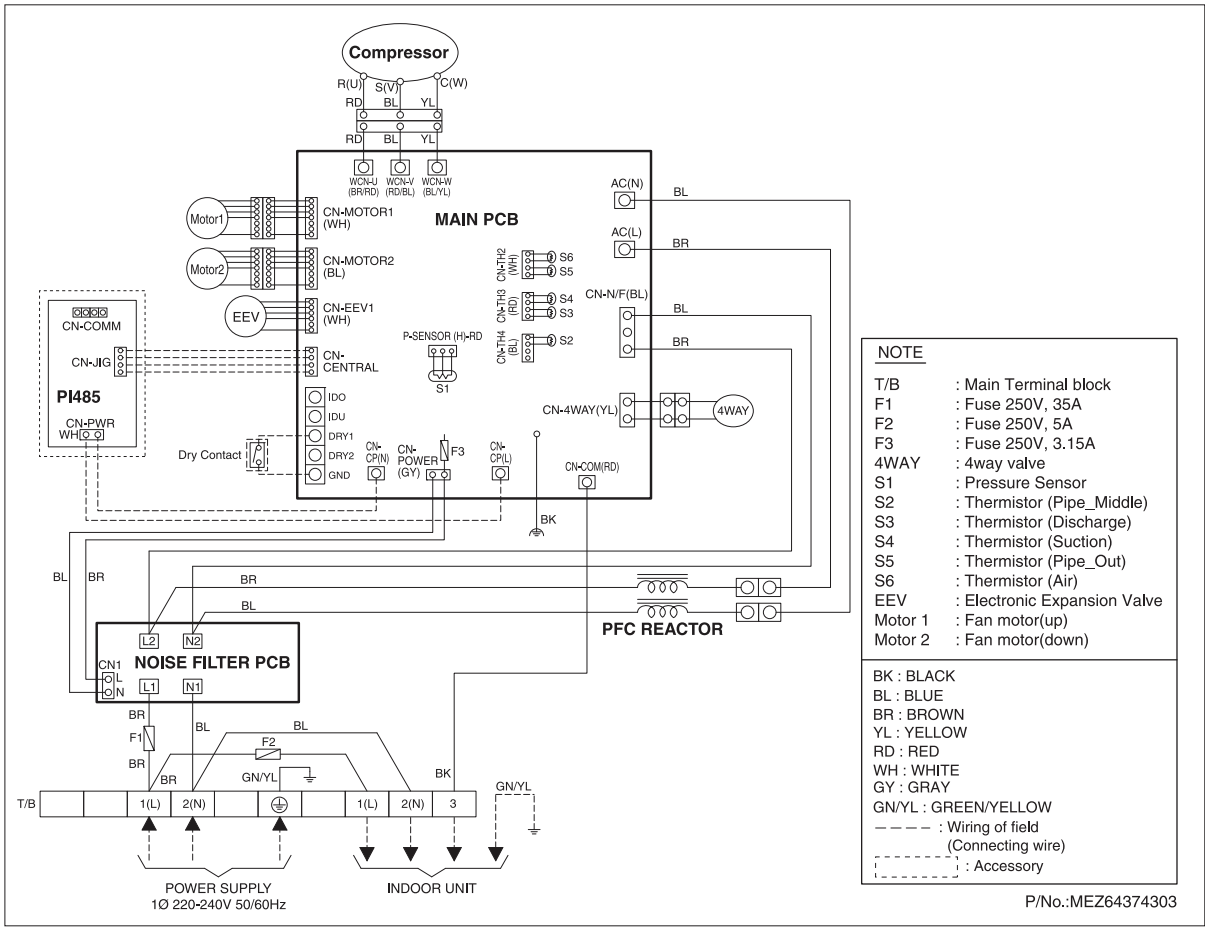

6. Wiring diagrams

◆ AUUW368D2 [UU37W UO2]

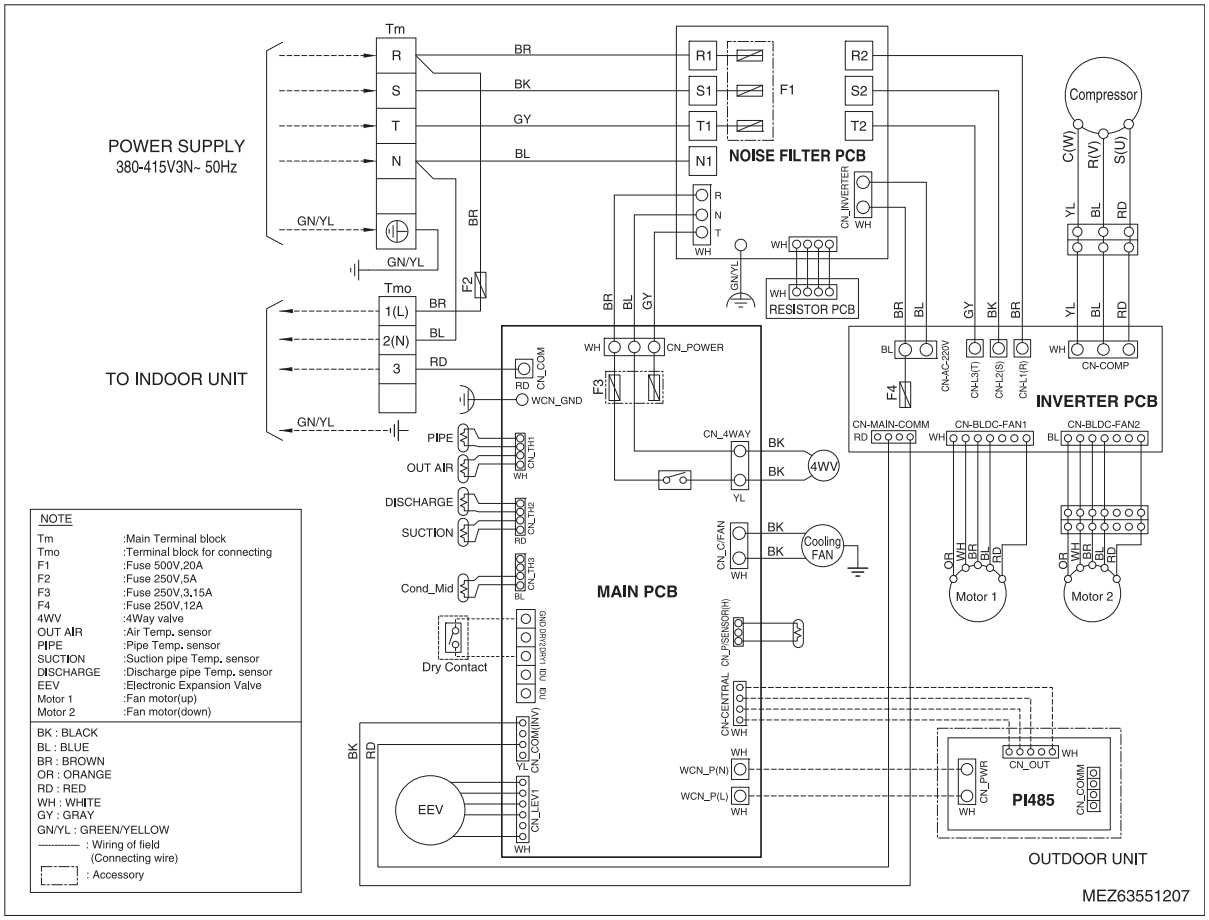

6. Wiring diagrams

◆ AUUW428D2 [UU43W U32], AUUW488D2 [UU49W U32], AUUW608D2 [UU61W U32]

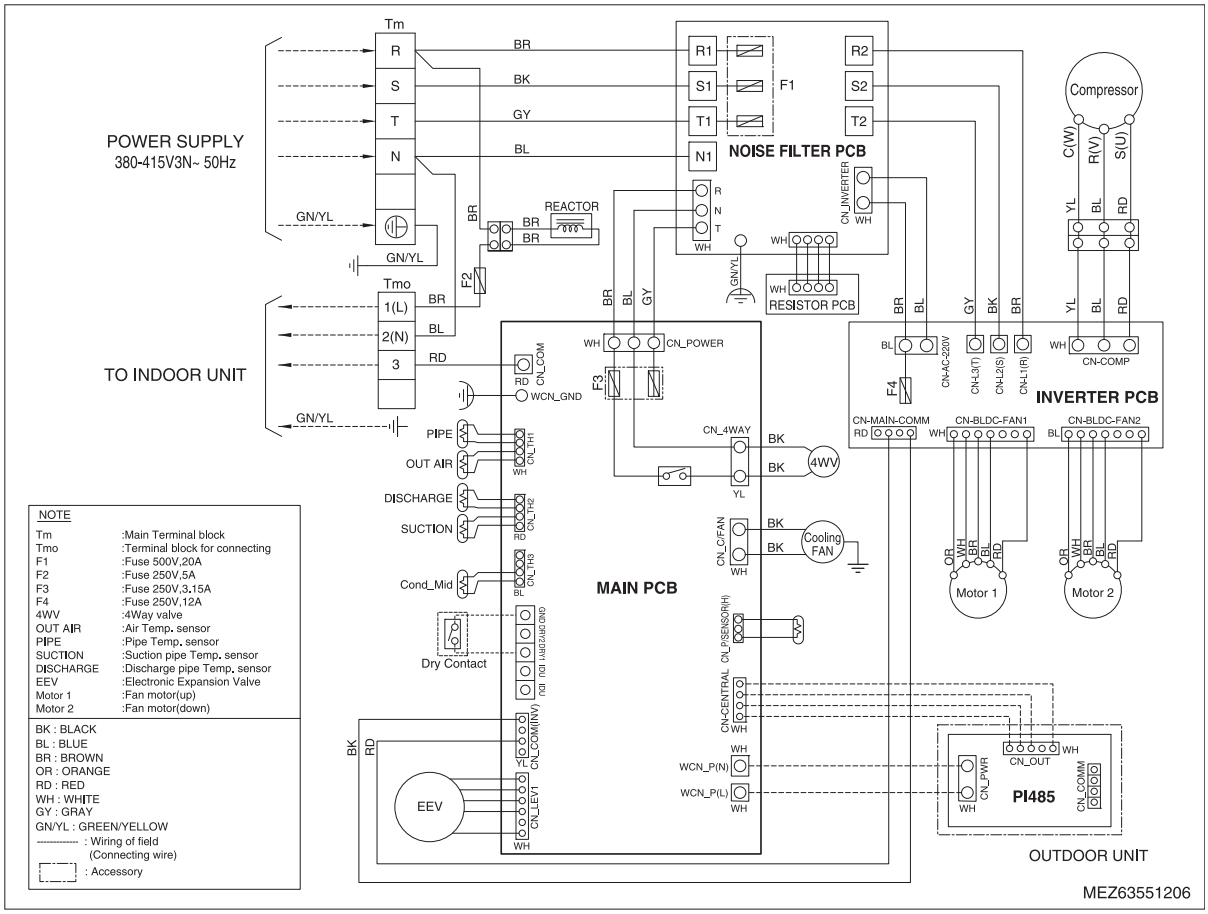

6. Wiring diagrams

◆ AUUW70LAE [UU70W U34]

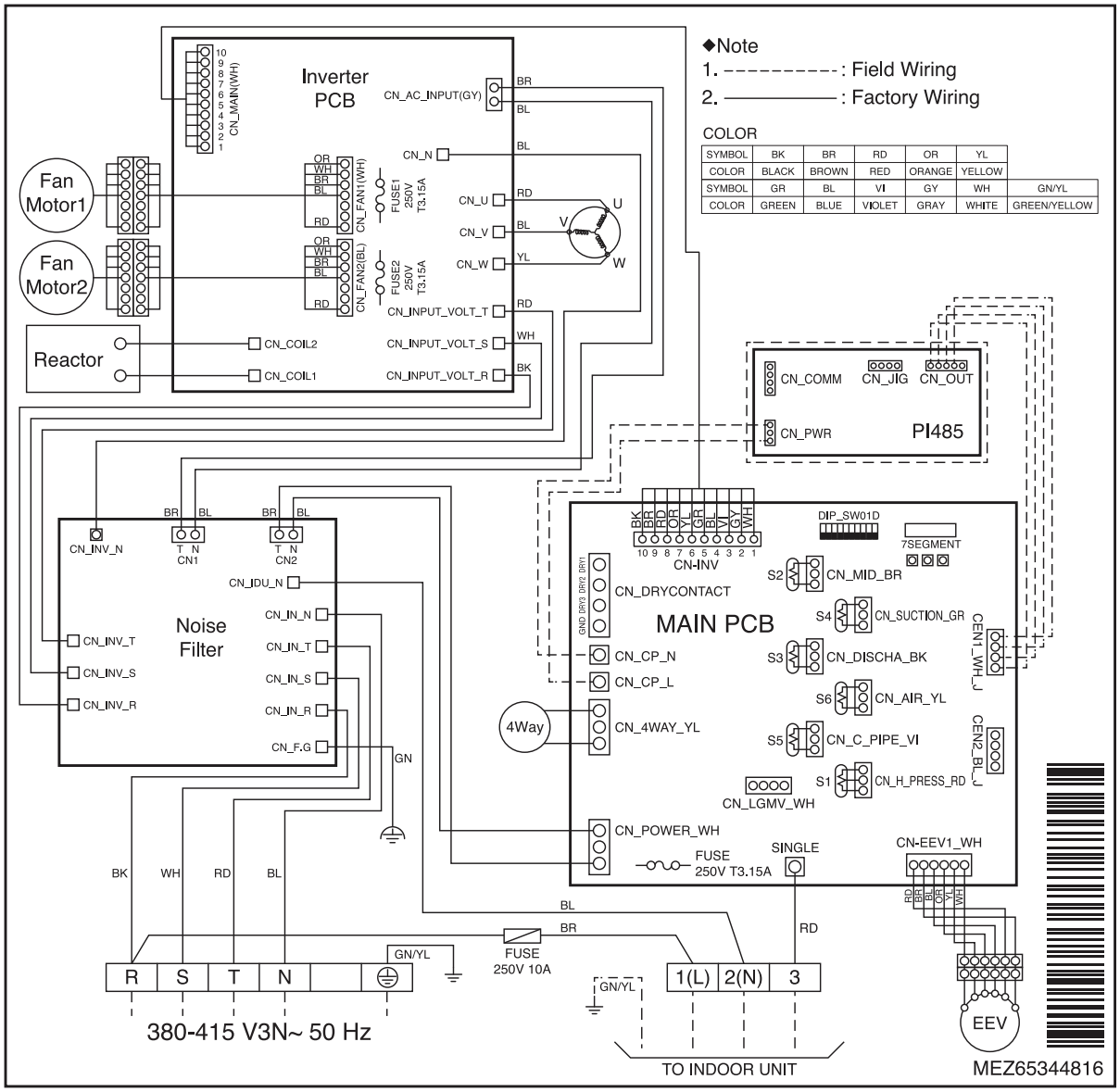

6. Wiring diagrams

◆ AUUW85LAE [UU85W U74]

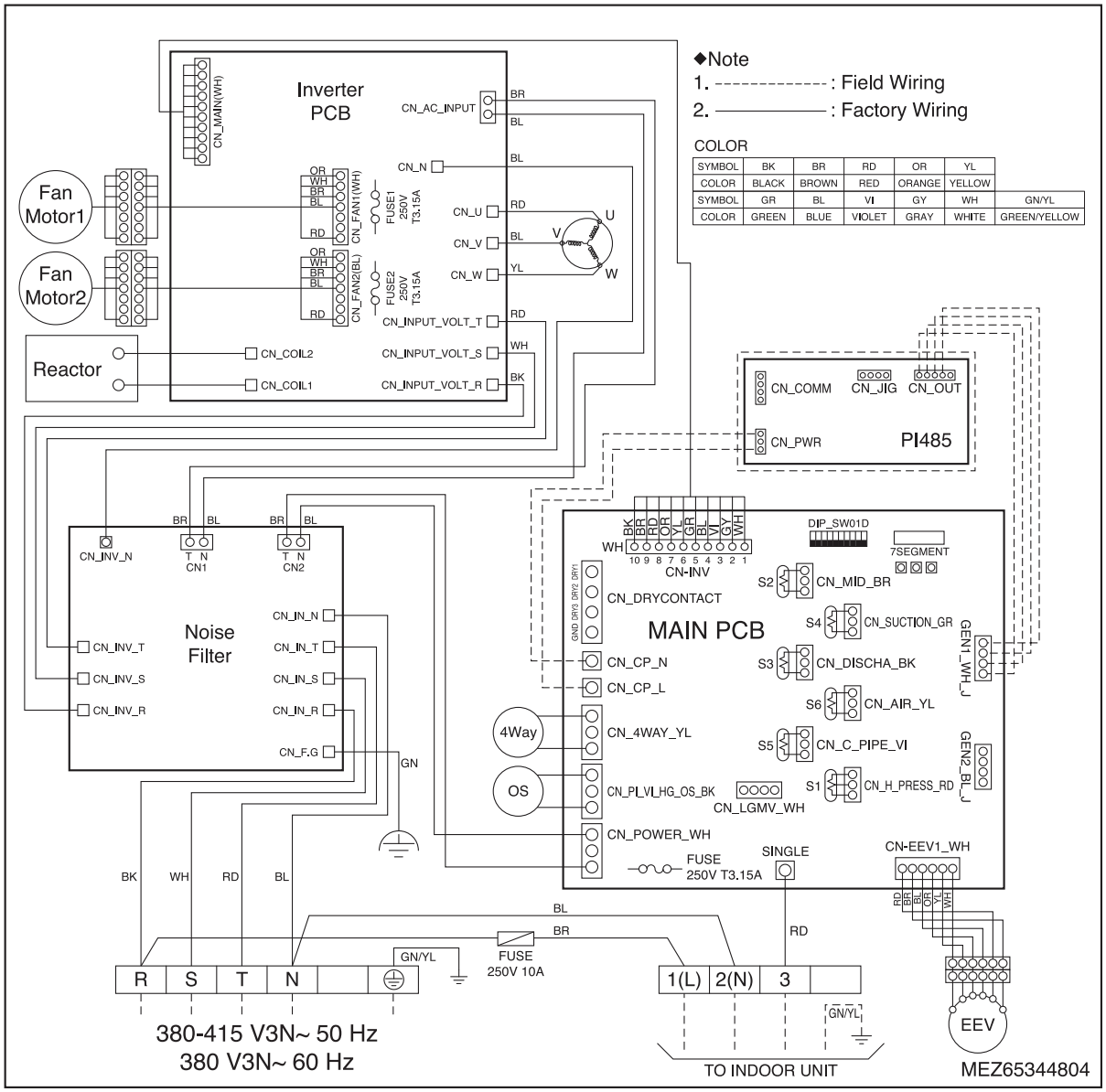

7. Capacity tables

7.1 AUUW096D [UU09W ULD]

◆ Cooling Capacity

■ ATNH09GRLE2 [CT09 NR2]

Outdoor Air Temp.	Indoor Air Temperature : °CDB / °CWB7																	
	20.0 / 14.0			22.0 / 16.0			25.0 / 18.0			27.0 / 19.0			30.0 / 22.0			32.0 / 24.0		
°CDB	TC	SHC	PI	TC	SHC	PI	TC	SHC	PI	TC	SHC	PI	TC	SHC	PI	TC	SHC	PI
20.0	2.70	2.46	0.55	2.86	2.49	0.74	3.03	2.51	0.80	3.11	2.54	0.81	3.36	2.59	0.81	3.53	2.64	0.81
25.0	2.58	2.38	0.57	2.74	2.42	0.75	2.91	2.44	0.81	2.99	2.47	0.82	3.24	2.52	0.83	3.41	2.57	0.84
32.0	2.42	2.28	0.77	2.59	2.33	0.90	2.75	2.36	0.95	2.83	2.39	0.96	3.08	2.45	0.98	3.24	2.51	1.00
35.0	2.35	2.21	0.86	2.51	2.25	0.97	2.67	2.29	0.99	2.75	2.31	0.99	3.00	2.38	1.04	3.17	2.44	1.06
40.0	2.24	2.14	0.94	2.41	2.19	1.01	2.57	2.23	1.03	2.65	2.26	1.03	2.90	2.33	1.05	3.06	2.39	1.07
43.0	2.18	2.07	0.92	2.35	2.12	0.96	2.51	2.16	0.96	2.59	2.19	0.96	2.84	2.26	0.97	3.00	2.32	0.99
46.0	2.12	2.00	0.83	2.28	2.06	0.84	2.45	2.10	0.82	2.53	2.13	0.81	2.78	2.21	0.81	2.94	2.27	0.83

■ ABNH09GL1A2 [CB09L N12]

Outdoor Air Temp.	Indoor Air Temperature : °CDB / °CWB																	
	20.0 / 14.0			22.0 / 16.0			25.0 / 18.0			27.0 / 19.0			30.0 / 22.0			32.0 / 24.0		
°CDB	TC	SHC	PI	TC	SHC	PI	TC	SHC	PI	TC	SHC	PI	TC	SHC	PI	TC	SHC	PI
20.0	3.14	2.73	0.59	3.33	2.77	0.79	3.52	2.79	0.86	3.62	2.82	0.87	3.91	2.87	0.87	4.10	2.92	0.86
25.0	3.00	2.64	0.61	3.19	2.68	0.80	3.39	2.71	0.86	3.48	2.74	0.88	3.77	2.80	0.89	3.96	2.86	0.90
32.0	2.82	2.54	0.82	3.01	2.58	0.97	3.20	2.62	1.02	3.30	2.65	1.03	3.58	2.72	1.05	3.77	2.78	1.07
35.0	2.73	2.45	0.92	2.92	2.50	1.04	3.11	2.54	1.08	3.20	2.56	1.06	3.49	2.64	1.11	3.68	2.71	1.13
40.0	2.61	2.38	1.01	2.80	2.43	1.08	2.99	2.48	1.10	3.09	2.51	1.10	3.37	2.59	1.12	3.56	2.65	1.14
43.0	2.54	2.29	0.99	2.73	2.35	1.03	2.92	2.40	1.03	3.02	2.43	1.03	3.30	2.51	1.04	3.49	2.58	1.06
46.0	2.47	2.22	0.88	2.66	2.28	0.90	2.85	2.33	0.87	2.94	2.37	0.87	3.23	2.45	0.87	3.42	2.52	0.89

■ AVNH09GELA2 [CV09 NE2]

Outdoor Air Temp.	Indoor Air Temperature : °CDB / °CWB																	
	20.0 / 14.0			22.0 / 16.0			25.0 / 18.0			27.0 / 19.0			30.0 / 22.0			32.0 / 24.0		
°CDB	TC	SHC	PI	TC	SHC	PI	TC	SHC	PI	TC	SHC	PI	TC	SHC	PI	TC	SHC	PI
20.0	2.70	2.55	0.55	2.86	2.58	0.74	3.03	2.60	0.80	3.11	2.63	0.81	3.36	2.68	0.81	3.53	2.73	0.81
25.0	2.58	2.47	0.57	2.74	2.50	0.75	2.91	2.53	0.81	2.99	2.56	0.82	3.24	2.61	0.83	3.41	2.67	0.84
32.0	2.42	2.37	0.77	2.59	2.41	0.90	2.75	2.45	0.95	2.83	2.47	0.96	3.08	2.54	0.98	3.24	2.60	1.00
35.0	2.35	2.29	0.86	2.51	2.33	0.97	2.67	2.37	0.99	2.75	2.39	0.99	3.00	2.47	1.04	3.17	2.52	1.06
40.0	2.24	2.22	0.94	2.41	2.27	1.01	2.57	2.31	1.03	2.65	2.34	1.03	2.90	2.42	1.05	3.06	2.48	1.07
43.0	2.18	2.14	0.92	2.35	2.19	0.96	2.51	2.24	0.96	2.59	2.27	0.96	2.84	2.35	0.97	3.00	2.41	0.99
46.0	2.12	2.07	0.83	2.28	2.13	0.84	2.45	2.18	0.82	2.53	2.21	0.81	2.78	2.29	0.81	2.94	2.35	0.83

■ AQNH09GALA0 [CQ09NA0]

Outdoor Air Temp.	Indoor Air Temperature : °CDB / °CWB																	
	20.0 / 14.0			22.0 / 16.0			25.0 / 18.0			27.0 / 19.0			30.0 / 22.0			32.0 / 24.0		
°CDB	TC	SHC	PI	TC	SHC	PI	TC	SHC	PI	TC	SHC	PI	TC	SHC	PI	TC	SHC	PI
20.0	3.33	3.08	0.53	3.54	3.12	0.72	3.74	3.15	0.78	3.85	3.17	0.79	4.15	3.24	0.79	4.36	3.30	0.78
25.0	3.19	2.98	0.55	3.39	3.02	0.73	3.60	3.06	0.78	3.70	3.09	0.79	4.01	3.16	0.81	4.21	3.22	0.81
32.0	2.99	2.86	0.74	3.20	2.91	0.88	3.40	2.95	0.92	3.50	2.99	0.93	3.81	3.07	0.95	4.01	3.14	0.97
35.0	2.90	2.76	0.83	3.10	2.82	0.94	3.31	2.86	0.96	3.40	2.89	0.96	3.71	2.98	1.01	3.91	3.05	1.03
40.0	2.78	2.68	0.91	2.98	2.74	0.98	3.18	2.79	1.00	3.28	2.83	1.00	3.58	2.92	1.01	3.79	2.99	1.04
43.0	2.70	2.58	0.89	2.90	2.65	0.93	3.10	2.70	0.93	3.20	2.74	0.93	3.51	2.83	0.94	3.71	2.91	0.96
46.0	2.62	2.50	0.80	2.83	2.57	0.81	3.03	2.63	0.79	3.13	2.67	0.78	3.43	2.76	0.78	3.63	2.84	0.80

Note

1. DB : Dry bulb temperature(℃), WB : Wet bulb temperature(℃)
2. TC : Total capacity(kW), SHC : Sensible Heating Capacity(kW)
3. PI : Power Input (kW, Compressor + indoor fan motor + outdoor fan motor)
4. All capacities are net. A deduction (cooling mode) or an addition (heating mode) of Capacity due to operating heat of indoor unit motor is reflected.
5. Direct interpolation is permissible. Do not extrapolate.
6. Rated capacities and power inputs are based on standard temperature and piping conditions, and it can be found on specifications table. Except for rated value, the performance is not guaranteed.
7. In accordance with the test standard(or nations), the rating will vary slightly.

7. Capacity tables

◆ Heating Capacity

■ ATNH09GRLE2 [CT09 NR2]

Outdoor Air Temp.	Indoor Air Temperature : °CDB											
	16.0		18.0		20.0		21.0		22.0		24.0	
°CWB	TC	PI	TC	PI	TC	PI	TC	PI	TC	PI	TC	PI
-15.0	2.35	1.30	2.33	1.32	2.31	1.34	2.30	1.36	2.30	1.37	2.28	1.39
-10.0	2.51	1.32	2.50	1.36	2.50	1.39	2.50	1.41	2.50	1.43	2.48	1.45
-5.0	2.80	1.26	2.81	1.29	2.81	1.33	2.81	1.35	2.81	1.37	2.77	1.39
0.0	3.08	1.17	3.08	1.21	3.07	1.24	3.06	1.26	3.05	1.27	3.04	1.28
6.0	3.36	1.11	3.33	1.14	3.30	1.16	3.28	1.17	3.26	1.18	3.25	1.19
10.0	3.57	1.08	3.53	1.10	3.50	1.12	3.50	1.13	3.50	1.13	3.44	1.13
15.0	3.67	1.03	3.66	1.04	3.66	1.04	3.64	1.04	3.61	1.04	3.59	1.05

■ ABNH09GL1A2 [CB09L N12]

Outdoor Air Temp.	Indoor Air Temperature : °CDB											
	16.0		18.0		20.0		21.0		22.0		24.0	
°CWB	TC	PI	TC	PI	TC	PI	TC	PI	TC	PI	TC	PI
-15.0	2.56	1.46	2.54	1.48	2.52	1.50	2.51	1.52	2.51	1.53	2.49	1.56
-10.0	2.74	1.48	2.73	1.52	2.73	1.56	2.73	1.58	2.73	1.60	2.70	1.62
-5.0	3.05	1.41	3.06	1.44	3.06	1.49	3.06	1.51	3.06	1.53	3.02	1.56
0.0	3.36	1.31	3.36	1.36	3.35	1.39	3.34	1.41	3.32	1.42	3.31	1.43
6.0	3.66	1.24	3.63	1.28	3.60	1.30	3.58	1.31	3.55	1.32	3.54	1.33
10.0	3.89	1.21	3.85	1.23	3.82	1.25	3.82	1.27	3.82	1.27	3.75	1.27
15.0	4.00	1.15	3.99	1.16	3.99	1.16	3.97	1.16	3.93	1.16	3.91	1.18

■ AVNH09GELA2 [CV09 NE2]

Outdoor Air Temp.	Indoor Air Temperature : °CDB											
	16.0		18.0		20.0		21.0		22.0		24.0	
°CWB	TC	PI	TC	PI	TC	PI	TC	PI	TC	PI	TC	PI
-15.0	2.35	1.33	2.33	1.35	2.31	1.38	2.30	1.39	2.30	1.40	2.28	1.43
-10.0	2.51	1.36	2.50	1.39	2.50	1.42	2.50	1.45	2.50	1.47	2.48	1.49
-5.0	2.80	1.29	2.81	1.33	2.81	1.36	2.81	1.38	2.81	1.40	2.77	1.42
0.0	3.08	1.20	3.08	1.24	3.07	1.27	3.06	1.29	3.05	1.30	3.04	1.32
6.0	3.36	1.13	3.33	1.16	3.30	1.19	3.28	1.20	3.26	1.21	3.25	1.22
10.0	3.57	1.11	3.53	1.13	3.50	1.15	3.50	1.15	3.50	1.16	3.44	1.16
15.0	3.67	1.05	3.66	1.06	3.66	1.07	3.64	1.07	3.61	1.07	3.59	1.08

■ AQNH09GALA0 [CQ09 NA0]

Outdoor Air Temp.	Indoor Air Temperature : °CDB											
	16.0		18.0		20.0		21.0		22.0		24.0	
°CWB	TC	PI	TC	PI	TC	PI	TC	PI	TC	PI	TC	PI
-15.0	2.99	1.33	2.96	1.35	2.94	1.37	2.93	1.39	2.93	1.40	2.90	1.43
-10.0	3.19	1.35	3.19	1.39	3.19	1.42	3.19	1.44	3.19	1.46	3.15	1.48
-5.0	3.56	1.29	3.57	1.32	3.57	1.36	3.57	1.38	3.57	1.40	3.53	1.42
0.0	3.92	1.20	3.92	1.23	3.91	1.27	3.90	1.28	3.89	1.30	3.86	1.31
6.0	4.27	1.13	4.24	1.16	4.20	1.18	4.17	1.20	4.14	1.20	4.14	1.21
10.0	4.55	1.10	4.49	1.13	4.46	1.14	4.46	1.15	4.46	1.16	4.38	1.16
15.0	4.67	1.05	4.65	1.06	4.66	1.07	4.63	1.07	4.59	1.07	4.57	1.07

Note

1. DB : Dry bulb temperature(℃), WB : Wet bulb temperature(℃)
2. TC : Total capacity(kW), SHC : Sensible Heating Capacity(kW)
3. PI : Power Input (kW, Compressor + indoor fan motor + outdoor fan motor)
4. All capacities are net. A deduction (cooling mode) or an addition (heating mode) of Capacity due to operating heat of indoor unit motor is reflected.
5. Direct interpolation is permissible. Do not extrapolate.
6. Rated capacities and power inputs are based on standard temperature and piping conditions, and it can be found on specifications table. Except for rated value, the performance is not guaranteed.
7. In accordance with the test standard(or nations), the rating will vary slightly.

7.2 AUUW126D [UU12W ULD]

◆ Cooling Capacity

■ ATNH12GRLE2 [CT12 NR2]

Outdoor Air Temp.	Indoor Air Temperature : °CDB / °CWB																	
	20.0 / 14.0			22.0 / 16.0			25.0 / 18.0			27.0 / 19.0			30.0 / 22.0			32.0 / 24.0		
°CDB	TC	SHC	PI	TC	SHC	PI	TC	SHC	PI	TC	SHC	PI	TC	SHC	PI	TC	SHC	PI
20.0	3.67	3.39	0.77	3.89	3.43	1.05	4.12	3.46	1.13	4.23	3.49	1.15	4.57	3.56	1.15	4.80	3.63	1.14
25.0	3.51	3.28	0.81	3.73	3.33	1.06	3.96	3.36	1.14	4.07	3.40	1.16	4.41	3.47	1.18	4.63	3.54	1.19
32.0	3.29	3.14	1.08	3.52	3.20	1.28	3.74	3.25	1.34	3.85	3.29	1.36	4.19	3.37	1.39	4.41	3.45	1.41
35.0	3.19	3.04	1.21	3.42	3.10	1.37	3.64	3.15	1.40	3.74	3.18	1.40	4.08	3.28	1.47	4.31	3.35	1.50
40.0	3.05	2.95	1.33	3.28	3.02	1.43	3.50	3.07	1.45	3.61	3.11	1.46	3.94	3.21	1.48	4.17	3.29	1.51
43.0	2.97	2.84	1.30	3.19	2.92	1.36	3.41	2.97	1.36	3.53	3.01	1.36	3.86	3.12	1.37	4.08	3.20	1.40
46.0	2.89	2.75	1.17	3.11	2.83	1.18	3.33	2.89	1.15	3.44	2.93	1.14	3.77	3.04	1.14	4.00	3.12	1.17

■ ABNH12GL2A2 [CB12L N22]

Outdoor Air Temp.	Indoor Air Temperature : °CDB / °CWB																	
	20.0 / 14.0			22.0 / 16.0			25.0 / 18.0			27.0 / 19.0			30.0 / 22.0			32.0 / 24.0		
°CDB	TC	SHC	PI	TC	SHC	PI	TC	SHC	PI	TC	SHC	PI	TC	SHC	PI	TC	SHC	PI
20.0	3.74	3.29	0.72	3.97	3.33	0.98	4.20	3.36	1.05	4.31	3.39	1.07	4.66	3.45	1.07	4.90	3.52	1.06
25.0	3.58	3.18	0.75	3.80	3.23	0.99	4.04	3.26	1.06	4.15	3.30	1.08	4.50	3.37	1.10	4.72	3.43	1.11
32.0	3.36	3.05	1.00	3.59	3.10	1.19	3.81	3.15	1.25	3.93	3.19	1.26	4.27	3.27	1.29	4.50	3.35	1.31
35.0	3.25	2.95	1.13	3.49	3.01	1.27	3.61	3.06	1.30	3.70	3.10	1.30	4.16	3.18	1.37	4.40	3.25	1.40
40.0	3.11	2.86	1.24	3.35	2.93	1.33	3.57	2.98	1.35	3.68	3.02	1.36	4.02	3.11	1.38	4.25	3.19	1.40
43.0	3.03	2.75	1.21	3.25	2.83	1.26	3.48	2.88	1.26	3.60	2.92	1.26	3.94	3.03	1.27	4.16	3.10	1.30
46.0	2.95	2.67	1.09	3.17	2.75	1.10	3.40	2.80	1.07	3.51	2.84	1.06	3.85	2.95	1.06	4.08	3.03	1.09

■ AVNH12GELA2 [CV12 NE2]

Outdoor Air Temp.	Indoor Air Temperature : °CDB / °CWB																	
	20.0 / 14.0			22.0 / 16.0			25.0 / 18.0			27.0 / 19.0			30.0 / 22.0			32.0 / 24.0		
°CDB	TC	SHC	PI	TC	SHC	PI	TC	SHC	PI	TC	SHC	PI	TC	SHC	PI	TC	SHC	PI
20.0	3.56	3.40	0.79	3.78	3.44	1.08	4.00	3.47	1.16	4.11	3.50	1.18	4.44	3.57	1.18	4.65	3.64	1.17
25.0	3.40	3.29	0.83	3.62	3.34	1.09	3.84	3.37	1.17	3.95	3.41	1.19	4.28	3.48	1.21	4.49	3.55	1.22
32.0	3.20	3.16	1.11	3.41	3.22	1.31	3.63	3.26	1.38	3.74	3.30	1.40	4.06	3.38	1.43	4.28	3.46	1.45
35.0	3.10	3.05	1.24	3.32	3.11	1.41	3.53	3.16	1.44	3.63	3.19	1.44	3.96	3.29	1.51	4.18	3.37	1.54
40.0	2.96	2.96	1.37	3.18	3.03	1.47	3.40	3.08	1.49	3.50	3.12	1.50	3.83	3.22	1.52	4.04	3.30	1.55
43.0	2.88	2.85	1.34	3.10	2.93	1.40	3.31	2.98	1.40	3.42	3.02	1.40	3.75	3.13	1.41	3.96	3.21	1.44
46.0	2.80	2.76	1.20	3.02	2.84	1.22	3.23	2.90	1.19	3.34	2.94	1.18	3.66	3.05	1.18	3.88	3.14	1.20

■ AQNH12GALA0 [CQ12 NA0]

Outdoor Air Temp.	Indoor Air Temperature : °CDB / °CWB																	
	20.0 / 14.0			22.0 / 16.0			25.0 / 18.0			27.0 / 19.0			30.0 / 22.0			32.0 / 24.0		
°CDB	TC	SHC	PI	TC	SHC	PI	TC	SHC	PI	TC	SHC	PI	TC	SHC	PI	TC	SHC	PI
20.0	3.67	3.47	0.79	3.89	3.52	1.07	4.12	3.55	1.16	4.23	3.58	1.17	4.57	3.65	1.17	4.80	3.72	1.16
25.0	3.51	3.36	0.83	3.73	3.41	1.08	3.96	3.45	1.17	4.07	3.48	1.18	4.41	3.56	1.20	4.63	3.63	1.21
32.0	3.29	3.22	1.11	3.52	3.29	1.31	3.74	3.33	1.37	3.85	3.37	1.39	4.19	3.46	1.42	4.41	3.54	1.45
35.0	3.19	3.11	1.24	3.42	3.18	1.40	3.64	3.23	1.43	3.74	3.26	1.43	4.08	3.36	1.50	4.31	3.44	1.53
40.0	3.05	3.02	1.36	3.28	3.09	1.46	3.50	3.15	1.48	3.61	3.19	1.49	3.94	3.29	1.51	4.17	3.37	1.54
43.0	2.97	2.91	1.33	3.19	2.99	1.39	3.41	3.05	1.39	3.53	3.09	1.39	3.86	3.19	1.40	4.08	3.28	1.43
46.0	2.89	2.82	1.19	3.11	2.90	1.21	3.33	2.96	1.18	3.44	3.01	1.17	3.77	3.12	1.17	4.00	3.20	1.20

Note

1. DB : Dry bulb temperature(℃), WB : Wet bulb temperature(℃)
2. TC : Total capacity(kW), SHC : Sensible Heating Capacity(kW)
3. PI : Power Input (kW, Compressor + indoor fan motor + outdoor fan motor)
4. All capacities are net. A deduction (cooling mode) or an addition (heating mode) of Capacity due to operating heat of indoor unit motor is reflected.
5. Direct interpolation is permissible. Do not extrapolate.
6. Rated capacities and power inputs are based on standard temperature and piping conditions, and it can be found on specifications table. Except for rated value, the performance is not guaranteed.
7. In accordance with the test standard(or nations), the rating will vary slightly.

7. Capacity tables

◆ Heating Capacity

■ ATNH12GRLE2 [CT12 NR2]

Outdoor Air Temp.	Indoor Air Temperature : °CDB											
	16.0		18.0		20.0		21.0		22.0		24.0	
°CWB	TC	PI	TC	PI	TC	PI	TC	PI	TC	PI	TC	PI
-15.0	3.13	1.77	3.10	1.79	3.08	1.82	3.07	1.84	3.07	1.86	3.04	1.89
-10.0	3.34	1.80	3.34	1.84	3.34	1.89	3.34	1.92	3.34	1.94	3.30	1.97
-5.0	3.73	1.71	3.74	1.76	3.74	1.81	3.74	1.83	3.74	1.86	3.70	1.88
0.0	4.11	1.60	4.10	1.64	4.09	1.68	4.08	1.71	4.07	1.73	4.05	1.74
6.0	4.47	1.50	4.44	1.54	4.40	1.57	4.37	1.59	4.34	1.60	4.33	1.61
10.0	4.76	1.47	4.70	1.50	4.67	1.52	4.67	1.53	4.67	1.54	4.59	1.54
15.0	4.89	1.39	4.88	1.41	4.88	1.42	4.85	1.42	4.81	1.42	4.79	1.43

■ ABNH12GL2A2 [CB12L N22]

Outdoor Air Temp.	Indoor Air Temperature : °CDB											
	16.0		18.0		20.0		21.0		22.0		24.0	
°CWB	TC	PI	TC	PI	TC	PI	TC	PI	TC	PI	TC	PI
-15.0	3.19	1.70	3.16	1.72	3.14	1.75	3.13	1.77	3.13	1.79	3.10	1.81
-10.0	3.41	1.73	3.41	1.77	3.41	1.81	3.41	1.84	3.41	1.86	3.37	1.89
-5.0	3.80	1.64	3.81	1.69	3.81	1.74	3.81	1.76	3.81	1.79	3.77	1.80
0.0	4.19	1.54	4.18	1.57	4.17	1.61	4.16	1.64	4.15	1.66	4.13	1.67
6.0	4.56	1.44	4.53	1.48	4.50	1.50	4.46	1.53	4.43	1.54	4.42	1.55
10.0	4.86	1.41	4.79	1.44	4.76	1.46	4.76	1.47	4.76	1.48	4.68	1.48
15.0	4.99	1.33	4.98	1.35	4.98	1.36	4.95	1.36	4.91	1.36	4.89	1.37

■ AVNH12GELA2 [CV12 NE2]

Outdoor Air Temp.	Indoor Air Temperature : °CDB											
	16.0		18.0		20.0		21.0		22.0		24.0	
°CWB	TC	PI	TC	PI	TC	PI	TC	PI	TC	PI	TC	PI
-15.0	2.97	1.89	2.95	1.92	2.93	1.96	2.92	1.97	2.91	2.00	2.89	2.03
-10.0	3.18	1.93	3.17	1.98	3.17	2.02	3.17	2.05	3.17	2.08	3.14	2.11
-5.0	3.55	1.83	3.55	1.89	3.55	1.94	3.55	1.97	3.55	1.99	3.51	2.02
0.0	3.90	1.71	3.90	1.76	3.89	1.81	3.88	1.83	3.87	1.85	3.85	1.87
6.0	4.25	1.61	4.22	1.65	4.18	1.69	4.15	1.70	4.12	1.72	4.12	1.73
10.0	4.53	1.57	4.47	1.61	4.44	1.63	4.44	1.64	4.43	1.65	4.36	1.65
15.0	4.65	1.49	4.63	1.51	4.64	1.52	4.61	1.52	4.57	1.52	4.55	1.53

■ AQNH12GALA0 [CQ12 NA0]

Outdoor Air Temp.	Indoor Air Temperature : °CDB											
	16.0		18.0		20.0		21.0		22.0		24.0	
°CWB	TC	PI	TC	PI	TC	PI	TC	PI	TC	PI	TC	PI
-15.0	3.13	1.73	3.10	1.76	3.08	1.79	3.07	1.81	3.07	1.83	3.04	1.86
-10.0	3.34	1.77	3.34	1.81	3.34	1.85	3.34	1.88	3.34	1.91	3.30	1.93
-5.0	3.73	1.68	3.74	1.73	3.74	1.78	3.74	1.80	3.74	1.83	3.70	1.85
0.0	4.11	1.57	4.10	1.61	4.09	1.65	4.08	1.67	4.07	1.70	4.05	1.71
6.0	4.47	1.48	4.44	1.51	4.40	1.54	4.37	1.56	4.34	1.57	4.33	1.58
10.0	4.76	1.44	4.70	1.47	4.67	1.49	4.67	1.50	4.67	1.51	4.59	1.51
15.0	4.89	1.37	4.88	1.38	4.88	1.39	4.85	1.39	4.81	1.39	4.79	1.40

Note

1. DB : Dry bulb temperature(℃), WB : Wet bulb temperature(℃)
2. TC : Total capacity(kW), SHC : Sensible Heating Capacity(kW)
3. PI : Power Input (kW, Compressor + indoor fan motor + outdoor fan motor)
4. All capacities are net. A deduction (cooling mode) or an addition (heating mode) of Capacity due to operating heat of indoor unit motor is reflected.
5. Direct interpolation is permissible. Do not extrapolate.
6. Rated capacities and power inputs are based on standard temperature and piping conditions, and it can be found on specifications table. Except for rated value, the performance is not guaranteed.
7. In accordance with the test standard(or nations), the rating will vary slightly.

7.3 AUUW18GAE [UU18W UE4]

◆ Cooling Capacity

Outdoor Air Temp.	Indoor Air Temperature : °CDB / °CWB																	
	20.0 / 14.0			22.0 / 16.0			25.0 / 18.0			27.0 / 19.0			30.0 / 22.0			32.0 / 24.0		
°CDB	TC	SHC	PI	TC	SHC	PI	TC	SHC	PI	TC	SHC	PI	TC	SHC	PI	TC	SHC	PI
20.0	3.51	2.70	0.74	4.39	3.18	0.98	5.06	3.65	1.22	5.57	3.89	1.27	6.08	3.82	1.32	6.47	3.78	1.32
25.0	3.32	2.62	0.81	4.20	3.10	1.06	4.87	3.57	1.32	5.38	3.81	1.37	5.89	3.74	1.41	6.28	3.70	1.42
32.0	3.05	2.51	0.93	3.93	2.98	1.18	4.60	3.46	1.45	5.11	3.70	1.50	5.62	3.63	1.55	6.01	3.58	1.56
35.0	2.94	2.46	0.98	3.82	2.94	1.23	4.49	3.41	1.51	5.00	3.65	1.56	5.51	3.58	1.61	5.90	3.54	1.62
40.0	2.74	2.38	1.06	3.63	2.86	1.31	4.30	3.33	1.61	4.81	3.57	1.66	5.32	3.50	1.70	5.71	3.46	1.71
43.0	2.63	2.33	1.11	3.51	2.81	1.36	4.18	3.28	1.67	4.69	3.52	1.72	5.21	3.45	1.76	5.59	3.41	1.77
46.0	2.52	2.28	1.16	3.40	2.76	1.41	4.07	3.24	1.73	4.58	3.47	1.77	5.09	3.41	1.82	5.48	3.36	1.83
48.0	2.44	2.25	1.19	3.32	2.73	1.44	3.64	2.92	1.78	4.10	3.13	1.82	4.56	3.07	1.87	4.92	3.03	1.88

◆ Heating Capacity

Outdoor Air Temp.	Indoor Air Temperature : °CDB									
	16.0		18.0		20.0		22.0		24.0	
°CWB	TC	PI	TC	PI	TC	PI	TC	PI	TC	PI
-20.0	3.45	1.14	3.42	1.21	3.39	1.27	3.37	1.33	3.34	1.37
-15.0	4.05	1.27	4.03	1.34	4.00	1.41	3.97	1.47	3.95	1.52
-10.0	4.66	1.41	4.62	1.48	4.60	1.55	4.57	1.61	4.55	1.68
-5.0	5.25	1.55	5.23	1.62	5.20	1.68	5.18	1.76	5.15	1.83
0.0	5.86	1.68	5.83	1.76	5.80	1.83	5.57	1.75	5.34	1.68
6.0	6.42	1.83	6.11	1.74	5.80	1.66	5.57	1.58	5.34	1.49
10.0	6.42	1.68	6.11	1.62	5.80	1.55	5.57	1.46	5.34	1.37
15.0	6.42	1.55	6.11	1.48	5.80	1.41	5.57	1.32	5.34	1.22
18.0	6.42	1.47	6.11	1.40	5.80	1.33	5.57	1.23	5.34	1.14

Except for standard temperature condition, the capacity is not guaranteed.

- Rate of change in TC and PI due to the iindoor unit at standard temperature condition.

Cooling

Indoor Unit	ATNW18GQLA0 [CT18 NQ4]		ABNW18GM1A0 [CM18 N14]		ABNH18GL2A2 [CB18 N22]		UVNH18GJLA2 [CV18 NJ2]		AQNH18GALA0 [CQ18 NA0]	
	TC	PI	TC	PI	TC	PI	TC	PI	TC	PI
Max.	1.10	1.17	1.20	1.21	1.20	1.26	1.16	1.15	1.12	1.19
Rated	1.00	1.00	1.00	0.94	1.00	0.99	1.00	0.94	1.00	0.99

Heating

Indoor Unit	ATNW18GQLA0 [CT18 NQ4]		ABNW18GM1A0 [CM18 N14]		ABNH18GL2A2 [CB18 N22]		UVNH18GJLA2 [CV18 NJ2]		AQNH18GALA [CQ18 NA0]	
	TC	PI	TC	PI	TC	PI	TC	PI	TC	PI
Max.	1.17	1.26	1.24	1.29	1.24	1.43	1.09	1.16	1.00	1.19
Rated	1.00	1.00	1.03	1.00	1.03	1.11	0.90	0.92	0.83	0.90

Note

1. DB : Dry bulb temperature(℃), WB : Wet bulb temperature(℃)
2. TC : Total capacity(kW), SHC : Sensible Heating Capacity(kW)
3. PI : Power Input (kW, Compressor + indoor fan motor + outdoor fan motor)
4. All capacities are net. A deduction (cooling mode) or an addition (heating mode) of Capacity due to operating heat of indoor unit motor is reflected.
5. Direct interpolation is permissible. Do not extrapolate.
6. Rated capacities and power inputs are based on standard temperature and piping conditions, and it can be found on specifications table. Except for rated value, the performance is not guaranteed.
7. In accordance with the test standard(or nations), the rating will vary slightly.

7.4 AUU24WGAE [UU24W U44]

◆ Cooling Capacity

Outdoor Air Temp.	Indoor Air Temperature : °CDB / °CWB																	
	20.0 / 14.0			22.0 / 16.0			25.0 / 18.0			27.0 / 19.0			30.0 / 22.0			32.0 / 24.0		
°CDB	TC	SHC	PI	TC	SHC	PI	TC	SHC	PI	TC	SHC	PI	TC	SHC	PI	TC	SHC	PI
20.0	4.77	3.97	0.95	5.97	4.67	1.26	6.88	5.37	1.57	7.58	5.73	1.63	8.27	5.62	1.69	8.80	5.56	1.70
25.0	4.51	3.86	1.04	5.71	4.56	1.36	6.62	5.26	1.69	7.32	5.61	1.75	8.01	5.51	1.81	8.54	5.44	1.82
32.0	4.15	3.69	1.19	5.35	4.39	1.51	6.26	5.09	1.86	6.96	5.44	1.93	7.65	5.34	1.99	8.18	5.27	2.00
35.0	3.99	3.62	1.25	5.19	4.32	1.57	6.11	5.02	1.94	6.80	5.37	2.00	7.49	5.27	2.06	8.02	5.20	2.07
40.0	3.73	3.50	1.36	4.93	4.20	1.68	5.85	4.90	2.06	6.54	5.25	2.12	7.24	5.15	2.18	7.76	5.09	2.20
43.0	3.58	3.43	1.42	4.78	4.13	1.74	5.69	4.83	2.14	6.39	5.18	2.20	7.08	5.08	2.26	7.61	5.02	2.27
46.0	3.42	3.36	1.48	4.62	4.06	1.80	5.54	4.76	2.21	6.23	5.11	2.27	6.92	5.01	2.33	7.45	4.94	2.35
48.0	3.32	3.31	1.53	4.52	4.02	1.85	5.55	4.82	2.51	6.26	5.17	2.58	6.97	5.07	2.65	7.50	5.00	2.66

◆ Heating Capacity

Outdoor Air Temp.	Indoor Air Temperature : °CDB									
	16.0		18.0		20.0		22.0		24.0	
°CWB	TC	PI	TC	PI	TC	PI	TC	PI	TC	PI
-20.0	4.77	1.59	4.73	1.72	4.69	1.86	4.65	2.02	4.61	2.18
-15.0	5.88	1.86	5.83	2.00	5.79	2.13	5.75	2.28	5.72	2.43
-10.0	6.98	2.13	6.94	2.27	6.90	2.41	6.86	2.55	6.82	2.68
-5.0	8.08	2.41	8.04	2.55	8.00	2.68	7.68	2.56	7.36	2.43
0.0	8.86	2.68	8.43	2.55	8.00	2.41	7.68	2.29	7.36	2.18
6.0	8.86	2.29	8.43	2.18	8.00	2.08	7.68	1.98	7.36	1.87
10.0	8.86	2.13	8.43	2.00	8.00	1.86	7.68	1.77	7.36	1.67
15.0	8.86	1.86	8.43	1.72	8.00	1.59	7.68	1.50	7.36	1.42
18.0	8.86	1.70	8.43	1.56	8.00	1.42	7.68	1.34	7.36	1.26

Except for standard temperature condition, the capacity is not guaranteed.

- Rate of change in TC and PI due to the iindoor unit at standard temperature condition.

Cooling

Indoor Unit	ATNW24GPLA0 [CT24 NP4]		ABNW24GM1A0 [CM24 N14]		ABNH24GL3A2 [CB24L N32]		UVNH24GJLA2 [CV24 NJ2]	
	TC	PI	TC	PI	TC	PI	TC	PI
Max.	1.15	1.29	1.10	1.34	1.13	1.52	1.10	1.45
Rated	1.00	1.00	1.00	1.04	1.04	1.18	1.00	1.13

Heating

Indoor Unit	ATNW24GPLA0 [CT24 NP4]		ABNW24GM1A0 [CM24 N14]		ABNH24GL3A2 [CB24L N32]		UVNH24GJLA2 [CV24 NJ2]	
	TC	PI	TC	PI	TC	PI	TC	PI
Max.	1.10	1.229	1.04	1.37	1.03	1.20	1.04	1.44
Rated	1.00	1.00	0.94	1.06	0.94	0.93	0.94	1.11

Note

1. DB : Dry bulb temperature(℃), WB : Wet bulb temperature(℃)
2. TC : Total capacity(kW), SHC : Sensible Heating Capacity(kW)
3. PI : Power Input (kW, Compressor + indoor fan motor + outdoor fan motor)
4. All capacities are net. A deduction (cooling mode) or an addition (heating mode) of Capacity due to operating heat of indoor unit motor is reflected.
5. Direct interpolation is permissible. Do not extrapolate.
6. Rated capacities and power inputs are based on standard temperature and piping conditions, and it can be found on specifications table. Except for rated value, the performance is not guaranteed.
7. In accordance with the test standard(or nations), the rating will vary slightly.

7.5 AUUW30GAE [UU30W U44]

◆ Cooling Capacity

Outdoor Air Temp.	Indoor Air Temperature : °CDB / °CWB																	
	20.0 / 14.0			22.0 / 16.0			25.0 / 18.0			27.0 / 19.0			30.0 / 22.0			32.0 / 24.0		
°CDB	TC	SHC	PI	TC	SHC	PI	TC	SHC	PI	TC	SHC	PI	TC	SHC	PI	TC	SHC	PI
20.0	5.61	4.32	1.19	7.02	5.08	1.57	8.10	5.84	1.95	8.92	6.22	2.02	9.73	6.11	2.10	10.35	6.04	2.11
25.0	5.31	4.19	1.30	6.72	4.95	1.70	7.79	5.72	2.10	8.61	6.10	2.18	9.43	5.99	2.25	10.05	5.91	2.27
32.0	4.88	4.01	1.48	6.29	4.77	1.88	7.37	5.54	2.32	8.18	5.92	2.40	9.00	5.81	2.47	9.62	5.73	2.49
35.0	4.70	3.94	1.56	6.11	4.70	1.96	7.18	5.46	2.41	8.00	5.84	2.49	8.82	5.73	2.57	9.44	5.66	2.58
40.0	4.39	3.81	1.69	5.80	4.57	2.09	6.88	5.33	2.57	7.69	5.71	2.65	8.51	5.60	2.72	9.13	5.53	2.73
43.0	4.21	3.73	1.77	5.62	4.49	2.17	6.53	5.13	2.75	7.33	5.50	2.83	8.13	5.39	2.91	8.73	5.32	2.92
46.0	4.03	3.65	1.85	5.44	4.42	2.25	6.19	4.92	2.93	6.96	5.28	3.01	7.74	5.18	3.09	8.33	5.11	3.11
48.0	3.90	3.60	1.90	5.32	4.36	2.30	5.96	4.78	3.06	6.72	5.14	3.14	7.48	5.03	3.22	8.06	4.96	3.23

◆ Heating Capacity

Outdoor Air Temp.	Indoor Air Temperature : °CDB									
	16.0		18.0		20.0		22.0		24.0	
°CWB	TC	PI	TC	PI	TC	PI	TC	PI	TC	PI
-20.0	4.97	2.16	4.93	2.32	4.88	2.47	4.84	2.64	4.80	2.81
-15.0	6.35	2.47	6.30	2.63	6.26	2.78	6.21	2.94	6.17	3.10
-10.0	7.72	2.78	7.67	2.94	7.63	3.09	7.59	3.25	7.55	3.40
-5.0	9.09	3.09	9.05	3.25	9.00	3.40	8.64	3.25	8.28	3.10
0.0	9.96	3.40	9.48	3.25	9.00	3.09	8.64	2.95	8.28	2.81
6.0	9.96	2.99	9.48	2.86	9.00	2.72	8.64	2.58	8.28	2.45
10.0	9.96	2.78	9.48	2.63	9.00	2.47	8.64	2.34	8.28	2.21
15.0	9.96	2.47	9.48	2.32	9.00	2.16	8.64	2.04	8.28	1.91
18.0	9.96	2.29	9.48	2.13	9.00	1.98	8.64	1.86	8.28	1.73

Except for standard temperature condition, the capacity is not guaranteed.

- Rate of change in TC and PI due to the iindoor unit at standard temperature condition.

Cooling

Indoor Unit	ATNW30GPLA0 [UT30 NP4]		ABNW30GM1A0 [UM30 N14]		UVNH30GJLA2 [UV30 NJ2]		AJNW30GVLA0 [UJ30 NV2]	
	TC	PI	TC	PI	TC	PI	TC	PI
Max.	1.10	1.26	1.10	1.22	1.05	1.28	1.06	1.16
Rated	1.00	1.00	0.98	0.97	0.95	1.01	0.98	0.92

Heating

Indoor Unit	ATNW30GPLA0 [UT30 NP4]		ABNW30GM1A0 [UM30 N14]		UVNH30GJLA2 [UV30 NJ2]		AJNW30GVLA0 [UJ30 NV2]	
	TC	PI	TC	PI	TC	PI	TC	PI
Max.	1.10	1.25	1.00	1.20	0.93	1.25	0.93	1.13
Rated	1.00	1.00	0.91	0.96	0.83	1.00	0.85	0.90

Note

1. DB : Dry bulb temperature(℃), WB : Wet bulb temperature(℃)
2. TC : Total capacity(kW), SHC : Sensible Heating Capacity(kW)
3. PI : Power Input (kW, Compressor + indoor fan motor + outdoor fan motor)
4. All capacities are net. A deduction (cooling mode) or an addition (heating mode) of Capacity due to operating heat of indoor unit motor is reflected.
5. Direct interpolation is permissible. Do not extrapolate.
6. Rated capacities and power inputs are based on standard temperature and piping conditions, and it can be found on specifications table. Except for rated value, the performance is not guaranteed.
7. In accordance with the test standard(or nations), the rating will vary slightly.

7.6 AUUW366D2 [UU36W UO2]

◆ Cooing Capacity

■ ATNH36GNLE2 [UT36 NN2]

Outdoor Air Temp.	Indoor Air Temperature : °CDB / °CWB																	
	20.0 / 14.0			22.0 / 16.0			25.0 / 18.0			27.0 / 19.0			30.0 / 22.0			32.0 / 24.0		
°CDB	TC	SHC	PI	TC	SHC	PI	TC	SHC	PI	TC	SHC	PI	TC	SHC	PI	TC	SHC	PI
20.0	10.79	9.49	2.27	11.45	9.61	3.08	12.11	9.70	3.33	12.45	9.78	3.37	13.44	9.98	3.37	14.11	10.16	3.35
25.0	10.32	9.18	2.38	10.98	9.33	3.11	11.64	9.43	3.35	11.97	9.52	3.40	12.96	9.73	3.46	13.62	9.93	3.49
32.0	9.69	8.81	3.19	10.34	8.98	3.76	11.00	9.11	3.95	11.33	9.21	3.99	12.32	9.45	4.09	12.97	9.67	4.16
35.0	9.39	8.52	3.56	10.05	8.69	4.04	10.70	8.83	4.12	11.00	8.91	4.12	12.01	9.19	4.32	12.66	9.40	4.40
40.0	8.98	8.26	3.91	9.63	8.45	4.21	10.29	8.61	4.27	10.62	8.72	4.28	11.60	8.99	4.35	12.25	9.22	4.44
43.0	8.73	7.97	3.83	9.39	8.17	4.01	10.04	8.33	4.00	10.37	8.45	3.99	11.35	8.73	4.03	12.00	8.97	4.12
46.0	8.49	7.72	3.44	9.14	7.93	3.48	9.79	8.11	3.40	10.12	8.22	3.37	11.10	8.52	3.37	11.76	8.76	3.45

■ UVNH36GKLA2 [UV36 NK2]

Outdoor Air Temp.	Indoor Air Temperature : °CDB / °CWB																	
	20.0 / 14.0			22.0 / 16.0			25.0 / 18.0			27.0 / 19.0			30.0 / 22.0			32.0 / 24.0		
°CDB	TC	SHC	PI	TC	SHC	PI	TC	SHC	PI	TC	SHC	PI	TC	SHC	PI	TC	SHC	PI
20.0	10.30	8.50	2.42	10.93	8.61	3.28	11.56	8.69	3.55	11.88	8.76	3.59	12.83	8.94	3.59	13.46	9.10	3.57
25.0	9.85	8.22	2.53	10.48	8.35	3.31	11.11	8.44	3.57	11.42	8.52	3.62	12.37	8.72	3.68	13.00	8.89	3.72
32.0	9.25	7.89	3.40	9.87	8.04	4.00	10.50	8.16	4.20	10.82	8.25	4.25	11.76	8.47	4.35	12.38	8.66	4.43
35.0	8.96	7.63	3.79	9.59	7.79	4.30	10.21	7.91	4.38	10.50	7.98	4.38	11.46	8.23	4.59	12.09	8.42	4.69
40.0	8.57	7.39	4.16	9.20	7.57	4.48	9.82	7.71	4.55	10.13	7.81	4.56	11.07	8.06	4.63	11.69	8.26	4.73
43.0	8.34	7.13	4.08	8.96	7.32	4.27	9.58	7.46	4.26	9.90	7.57	4.25	10.83	7.82	4.29	11.46	8.03	4.39
46.0	8.10	6.91	3.66	8.72	7.11	3.70	9.35	7.26	3.62	9.66	7.37	3.58	10.60	7.63	3.58	11.22	7.84	3.67

■ ABNW36GM2A0 [UM36 N24]

Outdoor Air Temp.	Indoor Air Temperature : °CDB / °CWB																	
	20.0 / 14.0			22.0 / 16.0			25.0 / 18.0			27.0 / 19.0			30.0 / 22.0			32.0 / 24.0		
°CDB	TC	SHC	PI	TC	SHC	PI	TC	SHC	PI	TC	SHC	PI	TC	SHC	PI	TC	SHC	PI
20.0	10.79	9.14	2.18	11.45	9.26	2.95	12.11	9.33	3.19	12.45	9.41	3.23	13.44	9.60	3.23	14.10	9.78	3.21
25.0	10.31	8.84	2.27	10.98	8.97	2.98	11.64	9.07	3.21	11.98	9.16	3.26	12.96	9.36	3.31	13.63	9.55	3.34
32.0	9.69	8.48	3.05	10.35	8.64	3.60	11.00	8.77	3.78	11.33	8.87	3.82	12.31	9.10	3.91	12.98	9.30	3.98
35.0	9.39	8.20	3.41	10.05	8.37	3.87	10.70	8.50	4.01	11.00	8.58	3.94	12.01	8.84	4.13	12.66	9.04	4.21
40.0	8.98	7.95	3.74	9.64	8.14	4.03	10.29	8.28	4.09	10.61	8.39	4.10	11.60	8.65	4.16	12.25	8.88	4.25
43.0	8.74	7.66	3.66	9.39	7.87	3.84	10.04	8.02	3.83	10.36	8.13	3.82	11.35	8.40	3.86	12.00	8.63	3.94
46.0	8.49	7.43	3.29	9.14	7.64	3.33	9.80	7.80	3.25	10.13	7.91	3.22	11.10	8.20	3.22	11.76	8.43	3.30

■ AJNW36GVLA0 [UJ36 NV2]

Outdoor Air Temp.	Indoor Air Temperature : °CDB / °CWB																	
	20.0 / 14.0			22.0 / 16.0			25.0 / 18.0			27.0 / 19.0			30.0 / 22.0			32.0 / 24.0		
°CDB	TC	SHC	PI	TC	SHC	PI	TC	SHC	PI	TC	SHC	PI	TC	SHC	PI	TC	SHC	PI
20.0	10.30	7.83	2.21	10.93	7.93	3.00	11.56	8.00	3.24	11.88	8.07	3.28	12.83	8.23	3.28	13.46	8.38	3.26
25.0	9.85	7.58	2.31	10.48	7.69	3.02	11.11	7.78	3.26	11.42	7.85	3.30	12.37	8.03	3.36	13.00	8.19	3.39
32.0	9.25	7.27	3.10	9.87	7.41	3.66	10.50	7.51	3.84	10.82	7.60	3.88	11.76	7.80	3.97	12.38	7.97	4.05
35.0	8.96	7.02	3.46	9.59	7.17	3.93	10.21	7.28	4.00	10.50	7.35	4.00	11.46	7.58	4.19	12.09	7.76	4.28
40.0	8.57	6.81	3.80	9.20	6.97	4.09	9.82	7.10	4.15	10.13	7.19	4.16	11.07	7.42	4.23	11.69	7.61	4.32
43.0	8.34	6.57	3.72	8.96	6.74	3.89	9.58	6.87	3.89	9.90	6.97	3.88	10.83	7.20	3.92	11.46	7.40	4.00
46.0	8.10	6.37	3.34	8.72	6.54	3.38	9.35	6.69	3.30	9.66	6.78	3.27	10.60	7.03	3.27	11.22	7.22	3.35

Note

1. DB : Dry bulb temperature(℃), WB : Wet bulb temperature(℃)
2. TC : Total capacity(kW), SHC : Sensible Heating Capacity(kW)
3. PI : Power Input (kW, Compressor + indoor fan motor + outdoor fan motor)
4. All capacities are net. A deduction (cooling mode) or an addition (heating mode) of Capacity due to operating heat of indoor unit motor is reflected.
5. Direct interpolation is permissible. Do not extrapolate.
6. Rated capacities and power inputs are based on standard temperature and piping conditions, and it can be found on specifications table. Except for rated value, the performance is not guaranteed.
7. In accordance with the test standard(or nations), the rating will vary slightly.

7. Capacity tables

◆ Heating Capacity

■ ATNH36GNLE2 [UT36 NN2]

Outdoor Air Temp.	Indoor Air Temperature : °CDB											
	16.0		18.0		20.0		21.0		22.0		24.0	
°CWB	TC	PI	TC	PI	TC	PI	TC	PI	TC	PI	TC	PI
-15.0	8.61	5.19	8.53	5.26	8.47	5.36	8.45	5.40	8.43	5.47	8.35	5.56
-10.0	9.19	5.28	9.18	5.41	9.18	5.54	9.18	5.62	9.18	5.71	9.09	5.78
-5.0	10.27	5.02	10.29	5.16	10.29	5.31	10.29	5.39	10.29	5.46	10.16	5.53
0.0	11.29	4.68	11.28	4.81	11.25	4.94	11.23	5.01	11.20	5.07	11.13	5.12
6.0	12.30	4.41	12.22	4.53	12.10	4.62	12.02	4.66	11.94	4.70	11.92	4.73
10.0	13.10	4.31	12.94	4.39	12.85	4.46	12.85	4.49	12.84	4.51	12.62	4.52
15.0	13.45	4.09	13.41	4.14	13.43	4.16	13.35	4.17	13.24	4.17	13.16	4.19

■ UVNH36GKLA2 [UV36 NK2]

Outdoor Air Temp.	Indoor Air Temperature : °CDB											
	16.0		18.0		20.0		21.0		22.0		24.0	
°CWB	TC	PI	TC	PI	TC	PI	TC	PI	TC	PI	TC	PI
-15.0	8.25	5.25	8.18	5.33	8.12	5.42	8.10	5.47	8.08	5.53	8.01	5.63
-10.0	8.81	5.35	8.80	5.48	8.80	5.61	8.80	5.69	8.80	5.78	8.71	5.86
-5.0	9.85	5.08	9.86	5.23	9.86	5.38	9.86	5.45	9.86	5.53	9.74	5.60
0.0	10.83	4.74	10.82	4.87	10.79	5.00	10.77	5.07	10.73	5.13	10.67	5.18
6.0	11.79	4.47	11.71	4.58	11.60	4.68	11.53	4.72	11.44	4.76	11.43	4.79
10.0	12.56	4.36	12.40	4.45	12.32	4.51	12.32	4.54	12.31	4.57	12.10	4.58
15.0	12.90	4.14	12.85	4.19	12.88	4.21	12.80	4.22	12.69	4.22	12.62	4.24

■ ABNW36GM2A0 [UM36 N24]

Outdoor Air Temp.	Indoor Air Temperature : °CDB											
	16.0		18.0		20.0		21.0		22.0		24.0	
°CWB	TC	PI	TC	PI	TC	PI	TC	PI	TC	PI	TC	PI
-15.0	8.75	4.69	8.67	4.76	8.61	4.84	8.59	4.88	8.57	4.93	8.49	5.03
-10.0	9.34	4.77	9.33	4.88	9.33	5.00	9.33	5.08	9.33	5.15	9.23	5.22
-5.0	10.44	4.53	10.46	4.66	10.46	4.79	10.46	4.86	10.46	4.93	10.32	4.99
0.0	11.48	4.23	11.47	4.35	11.44	4.46	11.42	4.52	11.38	4.58	11.32	4.63
6.0	12.51	3.98	12.42	4.09	12.30	4.17	12.23	4.22	12.14	4.24	12.11	4.28
10.0	13.32	3.89	13.16	3.97	13.06	4.03	13.06	4.05	13.05	4.08	12.83	4.08
15.0	13.68	3.69	13.63	3.74	13.65	3.75	13.57	3.76	13.46	3.76	13.38	3.78

■ AJNW36GVLA0 [UJ36 NV2]

Outdoor Air Temp.	Indoor Air Temperature : °CDB											
	16.0		18.0		20.0		21.0		22.0		24.0	
°CWB	TC	PI	TC	PI	TC	PI	TC	PI	TC	PI	TC	PI
-15.0	8.65	3.71	8.56	3.76	8.50	3.83	8.48	3.87	8.47	3.91	8.36	4.01
-10.0	9.10	3.62	9.08	3.71	9.08	3.81	9.08	3.86	9.08	3.91	8.99	4.02
-5.0	9.86	3.79	9.87	3.90	9.88	4.01	9.88	4.06	9.87	4.12	9.75	4.24
0.0	10.53	4.07	10.53	4.18	10.50	4.30	10.48	4.35	10.45	4.40	10.36	4.51
6.0	11.69	4.35	11.61	4.46	11.50	4.55	11.43	4.59	11.34	4.63	11.25	4.71
10.0	12.35	4.53	12.20	4.62	12.12	4.69	12.12	4.72	12.10	4.75	11.90	4.79
15.0	13.40	4.83	13.36	4.88	13.39	4.91	13.30	4.92	13.19	4.92	13.04	4.95

Note

1. DB : Dry bulb temperature(℃), WB : Wet bulb temperature(℃)
2. TC : Total capacity(kW), SHC : Sensible Heating Capacity(kW)
3. PI : Power Input (kW, Compressor + indoor fan motor + outdoor fan motor)
4. All capacities are net. A deduction (cooling mode) or an addition (heating mode) of Capacity due to operating heat of indoor unit motor is reflected.
5. Direct interpolation is permissible. Do not extrapolate.
6. Rated capacities and power inputs are based on standard temperature and piping conditions, and it can be found on specifications table. Except for rated value, the performance is not guaranteed.
7. In accordance with the test standard(or nations), the rating will vary slightly.

7.7 AUUW426D2 [UU41W U32]

◆ Cooling Capacity

■ ATNH42GMLE2 [UT42 NM2]

Outdoor Air Temp.	Indoor Air Temperature : °CDB / °CWB																	
	20.0 / 14.0			22.0 / 16.0			25.0 / 18.0			27.0 / 19.0			30.0 / 22.0			32.0 / 24.0		
°CDB	TC	SHC	PI	TC	SHC	PI	TC	SHC	PI	TC	SHC	PI	TC	SHC	PI	TC	SHC	PI
20.0	13.53	11.76	2.84	14.36	11.91	3.85	15.20	12.02	4.16	15.61	12.12	4.21	16.86	12.36	4.20	17.70	12.59	4.18
25.0	12.94	11.38	2.96	13.77	11.55	3.88	14.60	11.68	4.18	15.02	11.79	4.24	16.26	12.06	4.32	17.09	12.30	4.35
32.0	12.15	10.92	3.98	12.98	11.13	4.69	13.80	11.28	4.93	14.21	11.41	4.98	15.45	11.71	5.10	16.28	11.98	5.19
35.0	11.78	10.55	4.44	12.60	10.77	5.04	13.42	10.94	5.13	13.80	11.04	5.13	15.07	11.38	5.38	15.89	11.65	5.49
40.0	11.27	10.23	4.87	12.09	10.47	5.25	12.91	10.66	5.33	13.32	10.80	5.34	14.55	11.14	5.42	15.37	11.43	5.54
43.0	10.96	9.87	4.78	11.78	10.13	5.00	12.60	10.33	4.99	13.01	10.47	4.98	14.24	10.82	5.03	15.06	11.11	5.14
46.0	10.65	9.56	4.29	11.47	9.83	4.34	12.29	10.04	4.24	12.70	10.19	4.20	13.93	10.56	4.20	14.75	10.85	4.30

■ UVNH42GLLA2 [UV42 NL2]

Outdoor Air Temp.	Indoor Air Temperature : °CDB / °CWB																	
	20.0 / 14.0			22.0 / 16.0			25.0 / 18.0			27.0 / 19.0			30.0 / 22.0			32.0 / 24.0		
°CDB	TC	SHC	PI	TC	SHC	PI	TC	SHC	PI	TC	SHC	PI	TC	SHC	PI	TC	SHC	PI
20.0	13.53	11.03	2.92	14.36	11.17	3.95	15.20	11.27	4.28	15.61	11.37	4.32	16.86	11.60	4.32	17.70	11.81	4.30
25.0	12.94	10.67	3.05	13.77	10.84	3.99	14.60	10.95	4.30	15.02	11.06	4.36	16.26	11.31	4.44	17.09	11.54	4.48
32.0	12.15	10.24	4.09	12.98	10.44	4.82	13.80	10.58	5.07	14.21	10.70	5.12	15.45	10.99	5.24	16.28	11.23	5.34
35.0	11.78	9.90	4.56	12.60	10.10	5.18	13.42	10.26	5.28	13.80	10.36	5.28	15.07	10.68	5.53	15.89	10.93	5.65
40.0	11.27	9.60	5.01	12.09	9.82	5.40	12.91	10.00	5.48	13.32	10.13	5.49	14.55	10.45	5.58	15.37	10.72	5.70
43.0	10.96	9.26	4.91	11.78	9.50	5.14	12.60	9.69	5.13	13.01	9.82	5.12	14.24	10.15	5.17	15.06	10.42	5.29
46.0	10.65	8.97	4.41	11.47	9.22	4.46	12.29	9.42	4.36	12.70	9.56	4.31	13.93	9.90	4.32	14.75	10.18	4.42

■ ABNW42GM2A0 [UM42 N24]

Outdoor Air Temp.	Indoor Air Temperature : °CDB / °CWB																	
	20.0 / 14.0			22.0 / 16.0			25.0 / 18.0			27.0 / 19.0			30.0 / 22.0			32.0 / 24.0		
°CDB	TC	SHC	PI	TC	SHC	PI	TC	SHC	PI	TC	SHC	PI	TC	SHC	PI	TC	SHC	PI
20.0	12.95	11.25	2.46	13.74	11.39	3.34	14.54	11.48	3.61	14.94	11.58	3.65	16.13	11.82	3.65	16.92	12.04	3.63
25.0	12.38	10.88	2.57	13.17	11.04	3.37	13.97	11.16	3.63	14.37	11.28	3.68	15.56	11.53	3.75	16.35	11.76	3.78
32.0	11.63	10.44	3.46	12.42	10.63	4.08	13.20	10.79	4.28	13.59	10.91	4.33	14.78	11.20	4.43	15.57	11.45	4.51
35.0	11.27	10.09	3.86	12.06	10.30	4.38	12.84	10.46	4.54	13.20	10.56	4.46	14.42	10.88	4.68	15.20	11.13	4.77
40.0	10.77	9.78	4.23	11.57	10.02	4.56	12.35	10.19	4.63	12.74	10.33	4.64	13.92	10.65	4.71	14.70	10.93	4.81
43.0	10.49	9.43	4.15	11.27	9.68	4.34	12.05	9.87	4.33	12.44	10.00	4.33	13.62	10.34	4.37	14.40	10.62	4.47
46.0	10.19	9.14	3.72	10.97	9.40	3.77	11.76	9.59	3.68	12.15	9.74	3.64	13.32	10.09	3.65	14.12	10.37	3.73

Note

1. DB : Dry bulb temperature(℃), WB : Wet bulb temperature(℃)
2. TC : Total capacity(kW), SHC : Sensible Heating Capacity(kW)
3. PI : Power Input (kW, Compressor + indoor fan motor + outdoor fan motor)
4. All capacities are net. A deduction (cooling mode) or an addition (heating mode) of Capacity due to operating heat of indoor unit motor is reflected.
5. Direct interpolation is permissible. Do not extrapolate.
6. Rated capacities and power inputs are based on standard temperature and piping conditions, and it can be found on specifications table. Except for rated value, the performance is not guaranteed.
7. In accordance with the test standard(or nations), the rating will vary slightly.

7. Capacity tables

■ 1Ø Synchro Equlvalent capacity table

Max Power input of each model is tabulated below

(Duo)

Model	CT24 NP2 * 2	CM24 N14 * 2	CV24 NJ2 * 2	CB24L N32 * 2
PI	4.60	4.60	4.60	4.60

(Trio)

Model	CT18 NQ2 * 3	CM18 N14 * 3	CV18 NJ2 * 3	CB18L N22 * 3
PI	5.20	5.20	5.20	5.20

(Quartet)

Model	CT12 NR2 * 4	CB12L N22 * 4
PI	4.82	4.82

Note

1. DB : Dry bulb temperature(℃), WB : Wet bulb temperature(℃)
2. TC : Total capacity(kW), SHC : Sensible Heating Capacity(kW)
3. PI : Power Input (kW, Compressor + indoor fan motor + outdoor fan motor)
4. All capacities are net. A deduction (cooling mode) or an addition (heating mode) of Capacity due to operating heat of indoor unit motor is reflected.
5. For Synchro model operating simultaneously with combinations, The individual capacities of indoor unit are not gived because they are same with the Single model capacities.
6. Direct interpolation is permissible. Do not extrapolate.
7. Rated capacities and power inputs are based on standard temperature and piping conditions, and it can be found on specifications table. Except for rated value, the performance is not guaranteed.
8. In accordance with the test standard(or nations), the rating will vary slightly.

7. Capacity tables

◆ Heating Capacity

■ ATNH42GMLE2 [UT42 NM2]

Outdoor Air Temp.	Indoor Air Temperature : °CDB											
	16.0		18.0		20.0		21.0		22.0		24.0	
°CWB	TC	PI	TC	PI	TC	PI	TC	PI	TC	PI	TC	PI
-15.0	10.96	6.21	10.86	6.31	10.78	6.42	10.75	6.48	10.73	6.55	10.63	6.66
-10.0	11.70	6.33	11.68	6.48	11.68	6.64	11.68	6.74	11.68	6.84	11.56	6.93
-5.0	13.07	6.01	13.09	6.19	13.09	6.36	13.09	6.45	13.09	6.54	12.93	6.63
0.0	14.37	5.61	14.36	5.77	14.32	5.92	14.29	6.00	14.25	6.08	14.17	6.13
6.0	15.66	5.29	15.55	5.43	15.40	5.53	15.30	5.59	15.19	5.63	15.17	5.67
10.0	16.68	5.16	16.47	5.26	16.36	5.34	16.36	5.38	16.34	5.40	16.07	5.42
15.0	17.12	4.90	17.07	4.96	17.09	4.98	16.99	4.99	16.85	4.99	16.75	5.01

■ UVNH42GLLA2 [UV42 NL2]

Outdoor Air Temp.	Indoor Air Temperature : °CDB											
	16.0		18.0		20.0		21.0		22.0		24.0	
°CWB	TC	PI	TC	PI	TC	PI	TC	PI	TC	PI	TC	PI
-15.0	10.96	6.39	10.86	6.49	10.78	6.60	10.75	6.66	10.73	6.74	10.63	6.85
-10.0	11.70	6.51	11.68	6.67	11.68	6.83	11.68	6.93	11.68	7.03	11.56	7.13
-5.0	13.07	6.18	13.09	6.36	13.09	6.55	13.09	6.64	13.09	6.73	12.93	6.81
0.0	14.37	5.77	14.36	5.93	14.32	6.09	14.29	6.17	14.25	6.25	14.17	6.31
6.0	15.66	5.44	15.55	5.58	15.40	5.69	15.30	5.75	15.19	5.79	15.17	5.83
10.0	16.68	5.31	16.47	5.41	16.36	5.49	16.36	5.53	16.34	5.56	16.07	5.57
15.0	17.12	5.04	17.07	5.10	17.09	5.12	16.99	5.13	16.85	5.13	16.75	5.16

■ ABNW42GM2A0 [UM42 N24]

Outdoor Air Temp.	Indoor Air Temperature : °CDB											
	16.0		18.0		20.0		21.0		22.0		24.0	
°CWB	TC	PI	TC	PI	TC	PI	TC	PI	TC	PI	TC	PI
-15.0	10.67	5.34	10.58	5.42	10.50	5.51	10.47	5.56	10.45	5.62	10.35	5.72
-10.0	11.39	5.43	11.38	5.56	11.38	5.70	11.38	5.79	11.38	5.87	11.26	5.95
-5.0	12.73	5.16	12.76	5.31	12.76	5.46	12.76	5.54	12.76	5.62	12.59	5.68
0.0	14.00	4.82	13.98	4.95	13.95	5.08	13.92	5.15	13.88	5.22	13.80	5.27
6.0	15.26	4.54	15.15	4.66	15.00	4.75	14.91	4.80	14.80	4.83	14.77	4.87
10.0	16.24	4.43	16.05	4.52	15.92	4.59	15.92	4.62	15.91	4.64	15.65	4.64
15.0	16.68	4.20	16.62	4.26	16.65	4.27	16.55	4.28	16.41	4.28	16.32	4.31

Note

1. DB : Dry bulb temperature(℃), WB : Wet bulb temperature(℃)
2. TC : Total capacity(kW), SHC : Sensible Heating Capacity(kW)
3. PI : Power Input (kW, Compressor + indoor fan motor + outdoor fan motor)
4. All capacities are net. A deduction (cooling mode) or an addition (heating mode) of Capacity due to operating heat of indoor unit motor is reflected.
5. Direct interpolation is permissible. Do not extrapolate.
6. Rated capacities and power inputs are based on standard temperature and piping conditions, and it can be found on specifications table. Except for rated value, the performance is not guaranteed.
7. In accordance with the test standard(or nations), the rating will vary slightly.

7. Capacity tables

■ 1Ø Synchro Equlvalent capacity table

Max Power Input of each model is tabulated below

(Duo)

Model	CT24 NP2 * 2	CM24 N14 * 2	CV24 NJ2 * 2	CB24L N32 * 2
PI	4.60	4.60	4.60	4.60

(Trio)

Model	CT18 NQ2 * 3	CM18 N14 * 3	CV18 NJ2 * 3	CB18L N22 * 3
PI	5.20	5.20	5.20	5.20

(Quartet)

Model	CT12 NR2 * 4	CB12L N22 * 4
PI	4.82	4.82

Note

1. DB : Dry bulb temperature(℃), WB : Wet bulb temperature(℃)
2. TC : Total capacity(kW), SHC : Sensible Heating Capacity(kW)
3. PI : Power Input (kW, Compressor + indoor fan motor + outdoor fan motor)
4. All capacities are net. A deduction (cooling mode) or an addition (heating mode) of Capacity due to operating heat of indoor unit motor is reflected.
5. For Synchro model operating simultaneously with combinations, The individual capacities of indoor unit are not gived because they are same with the Single model capacities.
6. Direct interpolation is permissible. Do not extrapolate.
7. Rated capacities and power inputs are based on standard temperature and piping conditions, and it can be found on specifications table. Except for rated value, the performance is not guaranteed.
8. In accordance with the test standard(or nations), the rating will vary slightly.

7.8 AUUW486D2 [UU48W U32]

◆ Cooling Capacity

■ ATNH48GMLE2 [UT48 NM2]

Outdoor Air Temp.	Indoor Air Temperature : °CDB / °CWB																	
	20.0 / 14.0			22.0 / 16.0			25.0 / 18.0			27.0 / 19.0			30.0 / 22.0			32.0 / 24.0		
°CDB	TC	SHC	PI	TC	SHC	PI	TC	SHC	PI	TC	SHC	PI	TC	SHC	PI	TC	SHC	PI
20.0	15.39	12.87	3.36	16.34	13.04	4.56	17.29	13.15	4.93	17.76	13.27	4.98	19.19	13.53	4.98	20.13	13.79	4.95
25.0	14.72	12.46	3.51	15.67	12.65	4.60	16.61	12.78	4.96	17.08	12.91	5.03	18.50	13.20	5.11	19.44	13.47	5.16
32.0	13.83	11.95	4.71	14.76	12.18	5.56	15.70	12.35	5.84	16.17	12.49	5.90	17.58	12.82	6.04	18.52	13.11	6.15
35.0	13.40	11.55	5.26	14.34	11.79	5.97	15.27	11.97	6.09	15.70	12.09	6.09	17.14	12.46	6.38	18.07	12.75	6.51
40.0	12.82	11.20	5.78	13.75	11.47	6.22	14.68	11.67	6.31	15.15	11.83	6.33	16.55	12.20	6.43	17.49	12.51	6.57
43.0	12.46	10.80	5.66	13.40	11.08	5.92	14.33	11.30	5.91	14.80	11.46	5.90	16.20	11.85	5.96	17.13	12.16	6.09
46.0	12.11	10.47	5.08	13.05	10.76	5.14	13.98	10.99	5.02	14.45	11.16	4.97	15.85	11.56	4.97	16.78	11.88	5.09

■ UVNH48GLLA2 [UV48 NL2]

Outdoor Air Temp.	Indoor Air Temperature : °CDB / °CWB																	
	20.0 / 14.0			22.0 / 16.0			25.0 / 18.0			27.0 / 19.0			30.0 / 22.0			32.0 / 24.0		
°CDB	TC	SHC	PI	TC	SHC	PI	TC	SHC	PI	TC	SHC	PI	TC	SHC	PI	TC	SHC	PI
20.0	14.32	11.51	3.21	15.20	11.66	4.36	16.08	11.76	4.71	16.52	11.86	4.77	17.84	12.10	4.77	18.72	12.32	4.74
25.0	13.69	11.13	3.36	14.57	11.31	4.40	15.45	11.43	4.74	15.89	11.54	4.81	17.20	11.80	4.89	18.08	12.04	4.94
32.0	12.86	10.68	4.51	13.73	10.89	5.32	14.60	11.04	5.58	15.04	11.16	5.65	16.35	11.46	5.78	17.22	11.72	5.89
35.0	12.46	10.32	5.03	13.33	10.54	5.71	14.20	10.70	5.82	14.60	10.80	5.82	15.94	11.14	6.10	16.81	11.40	6.23
40.0	11.92	10.01	5.53	12.79	10.25	5.95	13.66	10.43	6.04	14.09	10.57	6.05	15.39	10.90	6.15	16.26	11.18	6.28
43.0	11.59	9.66	5.41	12.46	9.91	5.67	13.33	10.10	5.66	13.76	10.24	5.65	15.06	10.59	5.70	15.93	10.87	5.83
46.0	11.26	9.36	4.86	12.13	9.62	4.92	13.00	9.83	4.80	13.43	9.97	4.76	14.74	10.33	4.76	15.60	10.62	4.87

■ ABNW48GM3A0 [UM48 N34]

Outdoor Air Temp.	Indoor Air Temperature : °CDB / °CWB																	
	20.0 / 14.0			22.0 / 16.0			25.0 / 18.0			27.0 / 19.0			30.0 / 22.0			32.0 / 24.0		
°CDB	TC	SHC	PI	TC	SHC	PI	TC	SHC	PI	TC	SHC	PI	TC	SHC	PI	TC	SHC	PI
20.0	15.10	13.45	3.31	16.03	13.63	4.34	16.96	13.74	4.70	17.42	13.87	4.75	18.82	14.14	4.75	19.75	14.40	4.84
25.0	14.44	13.02	4.03	15.37	13.22	4.60	16.29	13.36	4.72	16.76	13.49	4.79	18.14	13.79	4.87	19.07	14.07	4.92
32.0	13.56	12.49	4.61	14.48	12.73	5.30	15.40	12.91	5.56	15.86	13.05	5.63	17.24	13.40	5.76	18.16	13.70	5.87
35.0	13.15	12.07	5.01	14.06	12.32	5.69	14.98	12.51	5.90	15.40	12.63	5.95	16.81	13.02	6.08	17.73	13.32	6.20
40.0	12.57	11.70	5.51	13.49	11.98	5.93	14.40	12.20	6.02	14.86	12.36	6.03	16.24	12.75	6.13	17.15	13.07	6.26
43.0	12.23	11.29	5.53	13.14	11.58	5.79	14.06	11.81	5.78	14.52	11.97	5.77	15.89	12.38	5.83	16.81	12.71	5.96
46.0	11.88	10.94	4.84	12.80	11.24	4.90	13.71	11.49	4.91	14.17	11.66	4.86	15.54	12.07	4.86	16.46	12.41	4.98

■ APNH48GTLA0 [UP48 NT2]

Outdoor Air Temp.	Indoor Air Temperature : °CDB / °CWB																	
	20.0 / 14.0			22.0 / 16.0			25.0 / 18.0			27.0 / 19.0			30.0 / 22.0			32.0 / 24.0		
°CDB	TC	SHC	PI	TC	SHC	PI	TC	SHC	PI	TC	SHC	PI	TC	SHC	PI	TC	SHC	PI
20.0	14.94	11.63	2.61	15.86	11.79	3.54	16.77	11.88	3.83	17.24	11.99	3.86	18.61	12.24	3.86	19.54	12.45	3.84
25.0	14.28	11.26	2.73	15.19	11.44	3.56	16.11	11.55	3.84	16.58	11.67	3.89	17.94	11.94	3.98	18.86	12.17	4.01
32.0	13.42	10.80	3.66	14.32	11.01	4.31	15.23	11.16	4.52	15.68	11.30	4.57	17.05	11.58	4.69	17.96	11.85	4.77
35.0	13.01	10.44	4.07	13.91	10.66	4.64	14.82	10.82	4.72	15.20	10.90	4.70	16.64	11.26	4.96	17.53	11.53	5.04
40.0	12.44	10.12	4.47	13.34	10.36	4.82	14.24	10.55	4.89	14.71	10.69	4.91	16.05	11.03	4.99	16.97	11.32	5.09
43.0	12.09	9.77	4.39	12.99	10.02	4.59	13.91	10.21	4.59	14.35	10.36	4.57	15.72	10.71	4.62	16.62	11.00	4.72
46.0	11.74	9.47	3.94	12.66	9.73	3.99	13.55	9.93	3.89	14.02	10.09	3.86	15.37	10.44	3.86	16.29	10.73	3.96

Note

1. DB : Dry bulb temperature(℃), WB : Wet bulb temperature(℃)
2. TC : Total capacity(kW), SHC : Sensible Heating Capacity(kW)
3. PI : Power Input (kW, Compressor + indoor fan motor + outdoor fan motor)
4. All capacities are net. A deduction (cooling mode) or an addition (heating mode) of Capacity due to operating heat of indoor unit motor is reflected.
5. Direct interpolation is permissible. Do not extrapolate.
6. Rated capacities and power inputs are based on standard temperature and piping conditions, and it can be found on specifications table. Except for rated value, the performance is not guaranteed.
7. In accordance with the test standard(or nations), the rating will vary slightly.

7. Capacity tables

■ 1Ø Synchro Equlvalent capacity table

Max Power Input of each model is tabulated below

(Duo)

Model	CT24 NP2 * 2	CM24 N14 * 2	CV24 NJ2 * 2	CB24L N32 * 2
PI	5.06	5.06	5.06	5.06

(Trio)

Model	CT18 NQ2 * 3	CM18 N14 * 3	CV18 NJ2 * 3	CB18L N22 * 3
PI	5.72	5.72	5.72	5.72

(Quartet)

Model	CT12 NR2 * 4	CB12L N22 * 4
PI	4.82	4.82

Note

1. DB : Dry bulb temperature(℃), WB : Wet bulb temperature(℃)
2. TC : Total capacity(kW), SHC : Sensible Heating Capacity(kW)
3. PI : Power Input (kW, Compressor + indoor fan motor + outdoor fan motor)
4. All capacities are net. A deduction (cooling mode) or an addition (heating mode) of Capacity due to operating heat of indoor unit motor is reflected.
5. For Synchro model operating simultaneously with combinations, The individual capacities of indoor unit are not gived because they are same with the Single model capacities.
6. Direct interpolation is permissible. Do not extrapolate.
7. Rated capacities and power inputs are based on standard temperature and piping conditions, and it can be found on specifications table. Except for rated value, the performance is not guaranteed.
8. In accordance with the test standard(or nations), the rating will vary slightly.

7. Capacity tables

◆ Heating Capacity

■ ATNH48GMLE2 [UT48 NM2]

Outdoor Air Temp.	Indoor Air Temperature : °CDB											
	16.0		18.0		20.0		21.0		22.0		24.0	
°CWB	TC	PI	TC	PI	TC	PI	TC	PI	TC	PI	TC	PI
-15.0	12.52	7.29	12.41	7.40	12.32	7.53	12.29	7.60	12.27	7.68	12.15	7.81
-10.0	13.37	7.42	13.35	7.61	13.35	7.79	13.35	7.91	13.35	8.02	13.22	8.13
-5.0	14.94	7.05	14.96	7.26	14.96	7.47	14.96	7.57	14.96	7.67	14.78	7.77
0.0	16.43	6.58	16.41	6.77	16.37	6.95	16.33	7.04	16.29	7.13	16.19	7.20
6.0	17.90	6.21	17.77	6.36	17.60	6.49	17.49	6.56	17.36	6.60	17.34	6.65
10.0	19.06	6.06	18.82	6.18	18.69	6.26	18.69	6.31	18.67	6.34	18.36	6.35
15.0	19.57	5.75	19.50	5.82	19.54	5.84	19.42	5.86	19.25	5.86	19.14	5.88

■ UVNH48GLLA2 [UV48 NL2]

Outdoor Air Temp.	Indoor Air Temperature : °CDB											
	16.0		18.0		20.0		21.0		22.0		24.0	
°CWB	TC	PI	TC	PI	TC	PI	TC	PI	TC	PI	TC	PI
-15.0	12.52	6.39	12.41	6.49	12.32	6.60	12.29	6.66	12.27	6.74	12.15	6.85
-10.0	13.37	6.51	13.35	6.67	13.35	6.83	13.35	6.93	13.35	7.03	13.22	7.13
-5.0	14.94	6.18	14.96	6.36	14.96	6.55	14.96	6.64	14.96	6.73	14.78	6.81
0.0	16.43	5.77	16.41	5.93	16.37	6.09	16.33	6.17	16.29	6.25	16.19	6.31
6.0	17.90	5.44	17.77	5.58	17.60	5.69	17.49	5.75	17.36	5.79	17.34	5.83
10.0	19.06	5.31	18.82	5.41	18.69	5.49	18.69	5.53	18.67	5.56	18.36	5.57
15.0	19.57	5.04	19.50	5.10	19.54	5.12	19.42	5.13	19.25	5.13	19.14	5.16

■ ABNW48GM3A0 [UM48 N34]

Outdoor Air Temp.	Indoor Air Temperature : °CDB											
	16.0		18.0		20.0		21.0		22.0		24.0	
°CWB	TC	PI	TC	PI	TC	PI	TC	PI	TC	PI	TC	PI
-15.0	13.68	5.33	13.55	5.41	13.45	5.51	13.42	5.56	13.40	5.63	13.24	5.76
-10.0	14.40	5.20	14.38	5.33	14.37	5.47	14.37	5.54	14.37	5.62	14.24	5.78
-5.0	15.61	5.44	15.62	5.60	15.63	5.76	15.63	5.84	15.63	5.92	15.44	6.09
0.0	16.67	5.85	16.66	6.02	16.62	6.18	16.58	6.25	16.53	6.33	16.40	6.48
6.0	18.50	6.26	18.38	6.41	18.20	6.54	18.09	6.60	17.95	6.66	17.81	6.77
10.0	19.55	6.51	19.31	6.64	19.18	6.74	19.18	6.78	19.15	6.82	18.83	6.88
15.0	21.21	6.94	21.15	7.01	21.19	7.06	21.05	7.07	20.87	7.07	20.63	7.12

■ APNH48GTLA0 [UP48 NT2]

Outdoor Air Temp.	Indoor Air Temperature : °CDB											
	16.0		18.0		20.0		21.0		22.0		24.0	
°CWB	TC	PI	TC	PI	TC	PI	TC	PI	TC	PI	TC	PI
-15.0	12.14	5.81	12.04	5.91	11.95	6.01	11.92	6.06	11.90	6.13	11.79	6.23
-10.0	12.97	5.92	12.95	6.07	12.95	6.22	12.95	6.31	12.95	6.40	12.82	6.49
-5.0	14.49	5.62	14.51	5.79	14.51	5.96	14.51	6.04	14.51	6.12	14.34	6.20
0.0	15.94	5.25	15.92	5.40	15.88	5.54	15.84	5.61	15.80	5.69	15.70	5.74
6.0	17.36	4.95	17.24	5.08	17.10	5.20	16.97	5.23	16.84	5.27	16.82	5.31
10.0	18.49	4.83	18.26	4.92	18.13	5.00	18.13	5.03	18.11	5.06	17.81	5.07
15.0	18.98	4.59	18.92	4.64	18.95	4.66	18.84	4.67	18.67	4.67	18.57	4.70

Note

1. DB : Dry bulb temperature(℃), WB : Wet bulb temperature(℃)
2. TC : Total capacity(kW), SHC : Sensible Heating Capacity(kW)
3. PI : Power Input (kW, Compressor + indoor fan motor + outdoor fan motor)
4. All capacities are net. A deduction (cooling mode) or an addition (heating mode) of Capacity due to operating heat of indoor unit motor is reflected.
5. Direct interpolation is permissible. Do not extrapolate.
6. Rated capacities and power inputs are based on standard temperature and piping conditions, and it can be found on specifications table. Except for rated value, the performance is not guaranteed.
7. In accordance with the test standard(or nations), the rating will vary slightly.

7. Capacity tables

■ 1Ø Synchro Equlvalent capacity table

Max Power Input of each model is tabulated below

(Duo)

Model	CT24 NP2 * 2	CM24 N14 * 2	CV24 NJ2 * 2	CB24L N32 * 2
PI	5.06	5.06	5.06	5.06

(Trio)

Model	CT18 NQ2 * 3	CM18 N14 * 3	CV18 NJ2 * 3	CB18L N22 * 3
PI	5.50	5.50	5.50	5.50

(Quartet)

Model	CT12 NR2 * 4	CB12L N22 * 4
PI	4.89	4.89

Note

1. DB : Dry bulb temperature(℃), WB : Wet bulb temperature(℃)
2. TC : Total capacity(kW), SHC : Sensible Heating Capacity(kW)
3. PI : Power Input (kW, Compressor + indoor fan motor + outdoor fan motor)
4. All capacities are net. A deduction (cooling mode) or an addition (heating mode) of Capacity due to operating heat of indoor unit motor is reflected.
5. For Synchro model operating simultaneously with combinations, The individual capacities of indoor unit are not gived because they are same with the Single model capacities.
6. Direct interpolation is permissible. Do not extrapolate.
7. Rated capacities and power inputs are based on standard temperature and piping conditions, and it can be found on specifications table. Except for rated value, the performance is not guaranteed.
8. In accordance with the test standard(or nations), the rating will vary slightly.

7.9 AUUW606D2 [UU60W U32]

◆ Cooling Capacity

■ ATNH60GMLE2 [UT60 NM2]

Outdoor Air Temp.	Indoor Air Temperature : °CDB / °CWB																	
	20.0 / 14.0			22.0 / 16.0			25.0 / 18.0			27.0 / 19.0			30.0 / 22.0			32.0 / 24.0		
°CDB	TC	SHC	PI	TC	SHC	PI	TC	SHC	PI	TC	SHC	PI	TC	SHC	PI	TC	SHC	PI
20.0	15.98	12.76	4.10	16.97	12.92	5.57	17.95	13.03	6.02	18.44	13.15	6.09	19.92	13.41	6.09	20.90	13.66	6.05
25.0	15.29	12.34	4.29	16.27	12.53	5.61	17.25	12.67	6.05	17.74	12.79	6.14	19.20	13.08	6.25	20.18	13.34	6.30
32.0	14.35	11.84	5.76	15.33	12.07	6.79	16.30	12.24	7.13	16.79	12.38	7.21	18.25	12.71	7.38	19.23	12.99	7.52
35.0	13.92	11.44	6.42	14.89	11.68	7.29	15.86	11.86	7.43	16.30	11.98	7.43	17.79	12.35	7.79	18.76	12.64	7.95
40.0	13.31	11.10	7.06	14.28	11.36	7.60	15.25	11.57	7.71	15.73	11.72	7.73	17.18	12.09	7.85	18.15	12.40	8.02
43.0	12.94	10.71	6.91	13.91	10.98	7.23	14.88	11.20	7.22	15.36	11.36	7.21	16.82	11.74	7.28	17.79	12.05	7.44
46.0	12.57	10.37	6.20	13.54	10.66	6.28	14.51	10.89	6.13	15.00	11.05	6.07	16.45	11.45	6.08	17.42	11.77	6.22

■ UVNH60GLLA2 [UV60 NL2]

Outdoor Air Temp.	Indoor Air Temperature : °CDB / °CWB																	
	20.0 / 14.0			22.0 / 16.0			25.0 / 18.0			27.0 / 19.0			30.0 / 22.0			32.0 / 24.0		
°CDB	TC	SHC	PI	TC	SHC	PI	TC	SHC	PI	TC	SHC	PI	TC	SHC	PI	TC	SHC	PI
20.0	15.39	11.96	3.86	16.34	12.12	5.24	17.29	12.22	5.66	17.76	12.33	5.73	19.19	12.58	5.73	20.13	12.81	5.70
25.0	14.72	11.57	4.04	15.67	11.75	5.29	16.61	11.88	5.70	17.08	12.00	5.78	18.50	12.27	5.88	19.44	12.51	5.93
32.0	13.83	11.11	5.42	14.76	11.32	6.39	15.70	11.48	6.71	16.17	11.61	6.79	17.58	11.91	6.95	18.52	12.18	7.07
35.0	13.40	10.73	6.05	14.34	10.96	6.87	15.27	11.13	7.00	15.70	11.23	7.00	17.14	11.58	7.33	18.07	11.85	7.48
40.0	12.82	10.41	6.64	13.75	10.65	7.16	14.68	10.85	7.26	15.15	10.99	7.28	16.55	11.34	7.39	17.49	11.62	7.55
43.0	12.46	10.04	6.51	13.40	10.30	6.81	14.33	10.50	6.80	14.80	10.65	6.79	16.20	11.01	6.85	17.13	11.30	7.00
46.0	12.11	9.73	5.84	13.05	10.00	5.91	13.98	10.22	5.77	14.45	10.37	5.72	15.85	10.74	5.72	16.78	11.04	5.86

■ ABNW60GM3A0 [UM60 N34]

Outdoor Air Temp.	Indoor Air Temperature : °CDB / °CWB																	
	20.0 / 14.0			22.0 / 16.0			25.0 / 18.0			27.0 / 19.0			30.0 / 22.0			32.0 / 24.0		
°CDB	TC	SHC	PI	TC	SHC	PI	TC	SHC	PI	TC	SHC	PI	TC	SHC	PI	TC	SHC	PI
20.0	15.98	14.41	3.63	16.97	14.60	4.75	17.95	14.73	5.14	18.44	14.85	5.20	19.92	15.15	5.20	20.90	15.43	5.30
25.0	15.29	13.94	4.41	16.27	14.16	5.03	17.25	14.31	5.17	17.74	14.45	5.24	19.20	14.78	5.33	20.18	15.07	5.38
32.0	14.35	13.38	5.04	15.33	13.64	5.80	16.30	13.83	6.09	16.79	13.98	6.16	18.25	14.35	6.30	19.23	14.68	6.42
35.0	13.92	12.93	5.49	14.89	13.20	6.23	15.86	13.40	6.46	16.30	13.53	6.51	17.79	13.95	6.65	18.76	14.28	6.79
40.0	13.31	12.54	6.02	14.28	12.84	6.49	15.25	13.07	6.58	15.73	13.24	6.60	17.18	13.66	6.70	18.15	14.00	6.85
43.0	12.94	12.10	6.05	13.91	12.41	6.34	14.88	12.65	6.33	15.36	12.83	6.31	16.82	13.26	6.38	17.79	13.61	6.52
46.0	12.57	11.72	5.30	13.54	12.05	5.36	14.51	12.31	5.37	15.00	12.49	5.32	16.45	12.94	5.32	17.42	13.30	5.45

Note

1. DB : Dry bulb temperature(℃), WB : Wet bulb temperature(℃)
2. TC : Total capacity(kW), SHC : Sensible Heating Capacity(kW)
3. PI : Power Input (kW, Compressor + indoor fan motor + outdoor fan motor)
4. All capacities are net. A deduction (cooling mode) or an addition (heating mode) of Capacity due to operating heat of indoor unit motor is reflected.
5. Direct interpolation is permissible. Do not extrapolate.
6. Rated capacities and power inputs are based on standard temperature and piping conditions, and it can be found on specifications table. Except for rated value, the performance is not guaranteed.
7. In accordance with the test standard(or nations), the rating will vary slightly.

7. Capacity tables

■ 1Ø Synchro Equlvalent capacity table

Max Power Input of each model is tabulated below

(Duo)

Model	UT30 NP2 * 2	UM30 N14 * 2	UV30 NJ2 * 2
PI	5.80	5.80	5.80

(Trio)

Model	CT18 NQ2 * 3	CM18 N14 * 3	CV18 NJ2 * 3	CB18L N22 * 3
PI	5.20	5.20	5.20	5.20

(Quartet)

Model	CT12 NR2 * 4	CB12L N22 * 4
PI	4.82	4.82

Note

1. DB : Dry bulb temperature(℃), WB : Wet bulb temperature(℃)
2. TC : Total capacity(kW), SHC : Sensible Heating Capacity(kW)
3. PI : Power Input (kW, Compressor + indoor fan motor + outdoor fan motor)
4. All capacities are net. A deduction (cooling mode) or an addition (heating mode) of Capacity due to operating heat of indoor unit motor is reflected.
5. For Synchro model operating simultaneously with combinations, The individual capacities of indoor unit are not gived because they are same with the Single model capacities.
6. Direct interpolation is permissible. Do not extrapolate.
7. Rated capacities and power inputs are based on standard temperature and piping conditions, and it can be found on specifications table. Except for rated value, the performance is not guaranteed.
8. In accordance with the test standard(or nations), the rating will vary slightly.

7. Capacity tables

◆ Heating Capacity

■ ATNH60GMLE2 [UT60 NM2]

Outdoor Air Temp.	Indoor Air Temperature : °CDB											
	16.0		18.0		20.0		21.0		22.0		24.0	
°CWB	TC	PI	TC	PI	TC	PI	TC	PI	TC	PI	TC	PI
-15.0	13.31	8.83	13.18	8.96	13.09	9.12	13.06	9.20	13.03	9.31	12.91	9.47
-10.0	14.20	8.99	14.18	9.22	14.18	9.44	14.18	9.58	14.18	9.72	14.04	9.85
-5.0	15.87	8.54	15.90	8.79	15.90	9.04	15.90	9.17	15.90	9.30	15.70	9.42
0.0	17.45	7.98	17.44	8.20	17.39	8.42	17.35	8.53	17.30	8.63	17.21	8.72
6.0	19.01	7.52	18.88	7.71	18.70	7.87	18.58	7.94	18.45	8.00	18.42	8.06
10.0	20.25	7.34	20.00	7.48	19.86	7.59	19.86	7.64	19.84	7.68	19.51	7.70
15.0	20.79	6.97	20.72	7.05	20.76	7.08	20.63	7.09	20.46	7.09	20.34	7.13

■ UVNH60GLLA2 [UV60 NL2]

Outdoor Air Temp.	Indoor Air Temperature : °CDB											
	16.0		18.0		20.0		21.0		22.0		24.0	
°CWB	TC	PI	TC	PI	TC	PI	TC	PI	TC	PI	TC	PI
-15.0	13.31	8.83	13.18	8.96	13.09	9.12	13.06	9.20	13.03	9.31	12.91	9.47
-10.0	14.20	8.99	14.18	9.22	14.18	9.44	14.18	9.58	14.18	9.72	14.04	9.85
-5.0	15.87	8.54	15.90	8.79	15.90	9.04	15.90	9.17	15.90	9.30	15.70	9.42
0.0	17.45	7.98	17.44	8.20	17.39	8.42	17.35	8.53	17.30	8.63	17.21	8.72
6.0	19.01	7.52	18.88	7.71	18.70	7.87	18.58	7.94	18.45	8.00	18.42	8.06
10.0	20.25	7.34	20.00	7.48	19.86	7.59	19.86	7.64	19.84	7.68	19.51	7.70
15.0	20.79	6.97	20.72	7.05	20.76	7.08	20.63	7.09	20.46	7.09	20.34	7.13

■ ABNW60GM3A0 [UM60 N34]

Outdoor Air Temp.	Indoor Air Temperature : °CDB											
	16.0		18.0		20.0		21.0		22.0		24.0	
°CWB	TC	PI	TC	PI	TC	PI	TC	PI	TC	PI	TC	PI
-15.0	14.06	5.45	13.92	5.54	13.82	5.64	13.79	5.69	13.77	5.75	13.60	5.89
-10.0	14.79	5.32	14.77	5.45	14.76	5.60	14.77	5.67	14.77	5.75	14.63	5.92
-5.0	16.03	5.57	16.05	5.73	16.06	5.89	16.06	5.98	16.05	6.06	15.86	6.23
0.0	17.13	5.98	17.12	6.15	17.07	6.32	17.04	6.40	16.99	6.48	16.85	6.63
6.0	19.01	6.40	18.88	6.55	18.70	6.69	18.58	6.75	18.45	6.81	18.30	6.92
10.0	20.09	6.66	19.84	6.79	19.70	6.89	19.70	6.94	19.68	6.98	19.35	7.04
15.0	21.80	7.10	21.73	7.18	21.77	7.22	21.63	7.23	21.45	7.23	21.20	7.28

Note

1. DB : Dry bulb temperature(℃), WB : Wet bulb temperature(℃)
2. TC : Total capacity(kW), SHC : Sensible Heating Capacity(kW)
3. PI : Power Input (kW, Compressor + indoor fan motor + outdoor fan motor)
4. All capacities are net. A deduction (cooling mode) or an addition (heating mode) of Capacity due to operating heat of indoor unit motor is reflected.
5. Direct interpolation is permissible. Do not extrapolate.
6. Rated capacities and power inputs are based on standard temperature and piping conditions, and it can be found on specifications table. Except for rated value, the performance is not guaranteed.
7. In accordance with the test standard(or nations), the rating will vary slightly.

7. Capacity tables

■ 1Ø Synchro Equlvalent capacity table

Max Power Input of each model is tabulated below

(Duo)

Model	UT30 NP2 * 2	UM30 N14 * 2	UV30 NJ2 * 2
PI	5.70	5.70	5.70

(Trio)

Model	CT18 NQ2 * 3	CM18 N14 * 3	CV18 NJ2 * 3	CB18L N22 * 3
PI	5.00	5.00	5.00	5.00

(Quartet)

Model	CT12 NR2 * 4	CB12L N22 * 4
PI	4.82	4.82

Note

1. DB : Dry bulb temperature(℃), WB : Wet bulb temperature(℃)
2. TC : Total capacity(kW), SHC : Sensible Heating Capacity(kW)
3. PI : Power Input (kW, Compressor + indoor fan motor + outdoor fan motor)
4. All capacities are net. A deduction (cooling mode) or an addition (heating mode) of Capacity due to operating heat of indoor unit motor is reflected.
5. For Synchro model operating simultaneously with combinations, The individual capacities of indoor unit are not gived because they are same with the Single model capacities.
6. Direct interpolation is permissible. Do not extrapolate.
7. Rated capacities and power inputs are based on standard temperature and piping conditions, and it can be found on specifications table. Except for rated value, the performance is not guaranteed.
8. In accordance with the test standard(or nations), the rating will vary slightly.

7.10 AUUW368D2 [UU37W UO2]

◆ Cooling Capacity

■ ATNH36GNLE2 [UT36 NN2]

Outdoor Air Temp.	Indoor Air Temperature : °CDB / °CWB																	
	20.0 / 14.0			22.0 / 16.0			25.0 / 18.0			27.0 / 19.0			30.0 / 22.0			32.0 / 24.0		
°CDB	TC	SHC	PI	TC	SHC	PI	TC	SHC	PI	TC	SHC	PI	TC	SHC	PI	TC	SHC	PI
20.0	10.79	9.49	2.27	11.45	9.61	3.08	12.11	9.70	3.33	12.45	9.78	3.37	13.44	9.98	3.37	14.11	10.16	3.35
25.0	10.32	9.18	2.38	10.98	9.33	3.11	11.64	9.43	3.35	11.97	9.52	3.40	12.96	9.73	3.46	13.62	9.93	3.49
32.0	9.69	8.81	3.19	10.34	8.98	3.76	11.00	9.11	3.95	11.33	9.21	3.99	12.32	9.45	4.09	12.97	9.67	4.16
35.0	9.39	8.52	3.56	10.05	8.69	4.04	10.70	8.83	4.12	11.00	8.91	4.12	12.01	9.19	4.32	12.66	9.40	4.40
40.0	8.98	8.26	3.91	9.63	8.45	4.21	10.29	8.61	4.27	10.62	8.72	4.28	11.60	8.99	4.35	12.25	9.22	4.44
43.0	8.73	7.97	3.83	9.39	8.17	4.01	10.04	8.33	4.00	10.37	8.45	3.99	11.35	8.73	4.03	12.00	8.97	4.12
46.0	8.49	7.72	3.44	9.14	7.93	3.48	9.79	8.11	3.40	10.12	8.22	3.37	11.10	8.52	3.37	11.76	8.76	3.45

■ UVNH36GKLA2 [UV36 NK2]

Outdoor Air Temp.	Indoor Air Temperature : °CDB / °CWB																	
	20.0 / 14.0			22.0 / 16.0			25.0 / 18.0			27.0 / 19.0			30.0 / 22.0			32.0 / 24.0		
°CDB	TC	SHC	PI	TC	SHC	PI	TC	SHC	PI	TC	SHC	PI	TC	SHC	PI	TC	SHC	PI
20.0	10.30	8.50	2.42	10.93	8.61	3.28	11.56	8.69	3.55	11.88	8.76	3.59	12.83	8.94	3.59	13.46	9.10	3.57
25.0	9.85	8.22	2.53	10.48	8.35	3.31	11.11	8.44	3.57	11.42	8.52	3.62	12.37	8.72	3.68	13.00	8.89	3.72
32.0	9.25	7.89	3.40	9.87	8.04	4.00	10.50	8.16	4.20	10.82	8.25	4.25	11.76	8.47	4.35	12.38	8.66	4.43
35.0	8.96	7.63	3.79	9.59	7.79	4.30	10.21	7.91	4.38	10.50	7.98	4.38	11.46	8.23	4.59	12.09	8.42	4.69
40.0	8.57	7.39	4.16	9.20	7.57	4.48	9.82	7.71	4.55	10.13	7.81	4.56	11.07	8.06	4.63	11.69	8.26	4.73
43.0	8.34	7.13	4.08	8.96	7.32	4.27	9.58	7.46	4.26	9.90	7.57	4.25	10.83	7.82	4.29	11.46	8.03	4.39
46.0	8.10	6.91	3.66	8.72	7.11	3.70	9.35	7.26	3.62	9.66	7.37	3.58	10.60	7.63	3.58	11.22	7.84	3.67

■ ABNW36GM2A0 [UM36 N24]

Outdoor Air Temp.	Indoor Air Temperature : °CDB / °CWB																	
	20.0 / 14.0			22.0 / 16.0			25.0 / 18.0			27.0 / 19.0			30.0 / 22.0			32.0 / 24.0		
°CDB	TC	SHC	PI	TC	SHC	PI	TC	SHC	PI	TC	SHC	PI	TC	SHC	PI	TC	SHC	PI
20.0	10.79	9.14	2.18	11.45	9.26	2.95	12.11	9.33	3.19	12.45	9.41	3.23	13.44	9.60	3.23	14.10	9.78	3.21
25.0	10.31	8.84	2.27	10.98	8.97	2.98	11.64	9.07	3.21	11.98	9.16	3.26	12.96	9.36	3.31	13.63	9.55	3.34
32.0	9.69	8.48	3.05	10.35	8.64	3.60	11.00	8.77	3.78	11.33	8.87	3.82	12.31	9.10	3.91	12.98	9.30	3.98
35.0	9.39	8.20	3.41	10.05	8.37	3.87	10.70	8.50	4.01	11.00	8.58	3.94	12.01	8.84	4.13	12.66	9.04	4.21
40.0	8.98	7.95	3.74	9.64	8.14	4.03	10.29	8.28	4.09	10.61	8.39	4.10	11.60	8.65	4.16	12.25	8.88	4.25
43.0	8.74	7.66	3.66	9.39	7.87	3.84	10.04	8.02	3.83	10.36	8.13	3.82	11.35	8.40	3.86	12.00	8.63	3.94
46.0	8.49	7.43	3.29	9.14	7.64	3.33	9.80	7.80	3.25	10.13	7.91	3.22	11.10	8.20	3.22	11.76	8.43	3.30

■ AJNW36GVLA0 [UJ36 NV2]

Outdoor Air Temp.	Indoor Air Temperature : °CDB / °CWB																	
	20.0 / 14.0			22.0 / 16.0			25.0 / 18.0			27.0 / 19.0			30.0 / 22.0			32.0 / 24.0		
°CDB	TC	SHC	PI	TC	SHC	PI	TC	SHC	PI	TC	SHC	PI	TC	SHC	PI	TC	SHC	PI
20.0	10.30	7.83	2.21	10.93	7.93	3.00	11.56	8.00	3.24	11.88	8.07	3.28	12.83	8.23	3.28	13.46	8.38	3.26
25.0	9.85	7.58	2.31	10.48	7.69	3.02	11.11	7.78	3.26	11.42	7.85	3.30	12.37	8.03	3.36	13.00	8.19	3.39
32.0	9.25	7.27	3.10	9.87	7.41	3.66	10.50	7.51	3.84	10.82	7.60	3.88	11.76	7.80	3.97	12.38	7.97	4.05
35.0	8.96	7.02	3.46	9.59	7.17	3.93	10.21	7.28	4.00	10.50	7.35	4.00	11.46	7.58	4.19	12.09	7.76	4.28
40.0	8.57	6.81	3.80	9.20	6.97	4.09	9.82	7.10	4.15	10.13	7.19	4.16	11.07	7.42	4.23	11.69	7.61	4.32
43.0	8.34	6.57	3.72	8.96	6.74	3.89	9.58	6.87	3.89	9.90	6.97	3.88	10.83	7.20	3.92	11.46	7.40	4.00
46.0	8.10	6.37	3.34	8.72	6.54	3.38	9.35	6.69	3.30	9.66	6.78	3.27	10.60	7.03	3.27	11.22	7.22	3.35

Note

1. DB : Dry bulb temperature(℃), WB : Wet bulb temperature(℃)
2. TC : Total capacity(kW), SHC : Sensible Heating Capacity(kW)
3. PI : Power Input (kW, Compressor + indoor fan motor + outdoor fan motor)
4. All capacities are net. A deduction (cooling mode) or an addition (heating mode) of Capacity due to operating heat of indoor unit motor is reflected.
5. Direct interpolation is permissible. Do not extrapolate.
6. Rated capacities and power inputs are based on standard temperature and piping conditions, and it can be found on specifications table. Except for rated value, the performance is not guaranteed.
7. In accordance with the test standard(or nations), the rating will vary slightly.

7. Capacity tables

◆ Heating Capacity

■ ATNH36GNLE2 [UT36 NN2]

Outdoor Air Temp.	Indoor Air Temperature : °CDB											
	16.0		18.0		20.0		21.0		22.0		24.0	
°CWB	TC	PI	TC	PI	TC	PI	TC	PI	TC	PI	TC	PI
-15.0	8.61	5.19	8.53	5.26	8.47	5.36	8.45	5.40	8.43	5.47	8.35	5.56
-10.0	9.19	5.28	9.18	5.41	9.18	5.54	9.18	5.62	9.18	5.71	9.09	5.78
-5.0	10.27	5.02	10.29	5.16	10.29	5.31	10.29	5.39	10.29	5.46	10.16	5.53
0.0	11.29	4.68	11.28	4.81	11.25	4.94	11.23	5.01	11.20	5.07	11.13	5.12
6.0	12.30	4.41	12.22	4.53	12.10	4.62	12.02	4.66	11.94	4.70	11.92	4.73
10.0	13.10	4.31	12.94	4.39	12.85	4.46	12.85	4.49	12.84	4.51	12.62	4.52
15.0	13.45	4.09	13.41	4.14	13.43	4.16	13.35	4.17	13.24	4.17	13.16	4.19

■ UVNH36GKLA2 [UV36 NK2]

Outdoor Air Temp.	Indoor Air Temperature : °CDB											
	16.0		18.0		20.0		21.0		22.0		24.0	
°CWB	TC	PI	TC	PI	TC	PI	TC	PI	TC	PI	TC	PI
-15.0	8.25	5.25	8.18	5.33	8.12	5.42	8.10	5.47	8.08	5.53	8.01	5.63
-10.0	8.81	5.35	8.80	5.48	8.80	5.61	8.80	5.69	8.80	5.78	8.71	5.86
-5.0	9.85	5.08	9.86	5.23	9.86	5.38	9.86	5.45	9.86	5.53	9.74	5.60
0.0	10.83	4.74	10.82	4.87	10.79	5.00	10.77	5.07	10.73	5.13	10.67	5.18
6.0	11.79	4.47	11.71	4.58	11.60	4.68	11.53	4.72	11.44	4.76	11.43	4.79
10.0	12.56	4.36	12.40	4.45	12.32	4.51	12.32	4.54	12.31	4.57	12.10	4.58
15.0	12.90	4.14	12.85	4.19	12.88	4.21	12.80	4.22	12.69	4.22	12.62	4.24

■ ABNW36GM2A0 [UM36 N24]

Outdoor Air Temp.	Indoor Air Temperature : °CDB											
	16.0		18.0		20.0		21.0		22.0		24.0	
°CWB	TC	PI	TC	PI	TC	PI	TC	PI	TC	PI	TC	PI
-15.0	8.75	4.69	8.67	4.76	8.61	4.84	8.59	4.88	8.57	4.93	8.49	5.03
-10.0	9.34	4.77	9.33	4.88	9.33	5.00	9.33	5.08	9.33	5.15	9.23	5.22
-5.0	10.44	4.53	10.46	4.66	10.46	4.79	10.46	4.86	10.46	4.93	10.32	4.99
0.0	11.48	4.23	11.47	4.35	11.44	4.46	11.42	4.52	11.38	4.58	11.32	4.63
6.0	12.51	3.98	12.42	4.09	12.30	4.17	12.23	4.22	12.14	4.24	12.11	4.28
10.0	13.32	3.89	13.16	3.97	13.06	4.03	13.06	4.05	13.05	4.08	12.83	4.08
15.0	13.68	3.69	13.63	3.74	13.65	3.75	13.57	3.76	13.46	3.76	13.38	3.78

■ AJNW36GVLA0 [UJ36 NV2]

Outdoor Air Temp.	Indoor Air Temperature : °CDB											
	16.0		18.0		20.0		21.0		22.0		24.0	
°CWB	TC	PI	TC	PI	TC	PI	TC	PI	TC	PI	TC	PI
-15.0	8.65	3.71	8.56	3.76	8.50	3.83	8.48	3.87	8.47	3.91	8.36	4.01
-10.0	9.10	3.62	9.08	3.71	9.08	3.81	9.08	3.86	9.08	3.91	8.99	4.02
-5.0	9.86	3.79	9.87	3.90	9.88	4.01	9.88	4.06	9.87	4.12	9.75	4.24
0.0	10.53	4.07	10.53	4.18	10.50	4.30	10.48	4.35	10.45	4.40	10.36	4.51
6.0	11.69	4.35	11.61	4.46	11.50	4.55	11.43	4.59	11.34	4.63	11.25	4.71
10.0	12.35	4.53	12.20	4.62	12.12	4.69	12.12	4.72	12.10	4.75	11.90	4.79
15.0	13.40	4.83	13.36	4.88	13.39	4.91	13.30	4.92	13.19	4.92	13.04	4.95

Note

1. DB : Dry bulb temperature(℃), WB : Wet bulb temperature(℃)
2. TC : Total capacity(kW), SHC : Sensible Heating Capacity(kW)
3. PI : Power Input (kW, Compressor + indoor fan motor + outdoor fan motor)
4. All capacities are net. A deduction (cooling mode) or an addition (heating mode) of Capacity due to operating heat of indoor unit motor is reflected.
5. Direct interpolation is permissible. Do not extrapolate.
6. Rated capacities and power inputs are based on standard temperature and piping conditions, and it can be found on specifications table. Except for rated value, the performance is not guaranteed.
7. In accordance with the test standard(or nations), the rating will vary slightly.

7.11 AUUW428D2 [UU43W U32]

◆ Cooling Capacity

■ ATNH42GMLE2 [UT42 NM2]

Outdoor Air Temp.	Indoor Air Temperature : °CDB / °CWB																	
	20.0 / 14.0			22.0 / 16.0			25.0 / 18.0			27.0 / 19.0			30.0 / 22.0			32.0 / 24.0		
°CDB	TC	SHC	PI	TC	SHC	PI	TC	SHC	PI	TC	SHC	PI	TC	SHC	PI	TC	SHC	PI
20.0	13.53	11.70	2.84	14.36	11.85	3.85	15.20	11.96	4.16	15.61	12.06	4.21	16.86	12.30	4.20	17.70	12.53	4.18
25.0	12.94	11.32	2.96	13.77	11.50	3.88	14.60	11.62	4.18	15.02	11.73	4.24	16.26	12.00	4.32	17.09	12.24	4.35
32.0	12.15	10.86	3.98	12.98	11.07	4.69	13.80	11.23	4.93	14.21	11.35	4.98	15.45	11.65	5.10	16.28	11.92	5.19
35.0	11.78	10.50	4.44	12.60	10.72	5.04	13.42	10.88	5.13	13.80	10.98	5.13	15.07	11.32	5.38	15.89	11.59	5.49
40.0	11.27	10.18	4.87	12.09	10.42	5.25	12.91	10.61	5.33	13.32	10.75	5.34	14.55	11.09	5.42	15.37	11.37	5.54
43.0	10.96	9.82	4.78	11.78	10.07	5.00	12.60	10.27	4.99	13.01	10.42	4.98	14.24	10.77	5.03	15.06	11.05	5.14
46.0	10.65	9.52	4.29	11.47	9.78	4.34	12.29	9.99	4.24	12.70	10.14	4.20	13.93	10.50	4.20	14.75	10.80	4.30

■ UVNH42GLLA2 [UV42 NL2]

Outdoor Air Temp.	Indoor Air Temperature : °CDB / °CWB																	
	20.0 / 14.0			22.0 / 16.0			25.0 / 18.0			27.0 / 19.0			30.0 / 22.0			32.0 / 24.0		
°CDB	TC	SHC	PI	TC	SHC	PI	TC	SHC	PI	TC	SHC	PI	TC	SHC	PI	TC	SHC	PI
20.0	13.53	11.03	2.92	14.36	11.17	3.95	15.20	11.27	4.28	15.61	11.37	4.32	16.86	11.60	4.32	17.70	11.81	4.30
25.0	12.94	10.67	3.05	13.77	10.84	3.99	14.60	10.95	4.30	15.02	11.06	4.36	16.26	11.31	4.44	17.09	11.54	4.48
32.0	12.15	10.24	4.09	12.98	10.44	4.82	13.80	10.58	5.07	14.21	10.70	5.12	15.45	10.99	5.24	16.28	11.23	5.34
35.0	11.78	9.90	4.56	12.60	10.10	5.18	13.42	10.26	5.28	13.80	10.36	5.28	15.07	10.68	5.53	15.89	10.93	5.65
40.0	11.27	9.60	5.01	12.09	9.82	5.40	12.91	10.00	5.48	13.32	10.13	5.49	14.55	10.45	5.58	15.37	10.72	5.70
43.0	10.96	9.26	4.91	11.78	9.50	5.14	12.60	9.69	5.13	13.01	9.82	5.12	14.24	10.15	5.17	15.06	10.42	5.29
46.0	10.65	8.97	4.41	11.47	9.22	4.46	12.29	9.42	4.36	12.70	9.56	4.31	13.93	9.90	4.32	14.75	10.18	4.42

■ ABNW42GM2A0 [UM42 N24]

Outdoor Air Temp.	Indoor Air Temperature : °CDB / °CWB																	
	20.0 / 14.0			22.0 / 16.0			25.0 / 18.0			27.0 / 19.0			30.0 / 22.0			32.0 / 24.0		
°CDB	TC	SHC	PI	TC	SHC	PI	TC	SHC	PI	TC	SHC	PI	TC	SHC	PI	TC	SHC	PI
20.0	12.95	11.25	2.46	13.74	11.39	3.34	14.54	11.48	3.61	14.94	11.58	3.65	16.13	11.82	3.65	16.92	12.04	3.63
25.0	12.38	10.88	2.57	13.17	11.04	3.37	13.97	11.16	3.63	14.37	11.28	3.68	15.56	11.53	3.75	16.35	11.76	3.78
32.0	11.63	10.44	3.46	12.42	10.63	4.08	13.20	10.79	4.28	13.59	10.91	4.33	14.78	11.20	4.43	15.57	11.45	4.51
35.0	11.27	10.09	3.86	12.06	10.30	4.38	12.84	10.46	4.54	13.20	10.56	4.46	14.42	10.88	4.68	15.20	11.13	4.77
40.0	10.77	9.78	4.23	11.57	10.02	4.56	12.35	10.19	4.63	12.74	10.33	4.64	13.92	10.65	4.71	14.70	10.93	4.81
43.0	10.49	9.43	4.15	11.27	9.68	4.34	12.05	9.87	4.33	12.44	10.00	4.33	13.62	10.34	4.37	14.40	10.62	4.47
46.0	10.19	9.14	3.72	10.97	9.40	3.77	11.76	9.59	3.68	12.15	9.74	3.64	13.32	10.09	3.65	14.12	10.37	3.73

Note

1. DB : Dry bulb temperature(℃), WB : Wet bulb temperature(℃)
2. TC : Total capacity(kW), SHC : Sensible Heating Capacity(kW)
3. PI : Power Input (kW, Compressor + indoor fan motor + outdoor fan motor)
4. All capacities are net. A deduction (cooling mode) or an addition (heating mode) of Capacity due to operating heat of indoor unit motor is reflected.
5. Direct interpolation is permissible. Do not extrapolate.
6. Rated capacities and power inputs are based on standard temperature and piping conditions, and it can be found on specifications table. Except for rated value, the performance is not guaranteed.
7. In accordance with the test standard(or nations), the rating will vary slightly.

7. Capacity tables

■ 3Ø Synchro Equlvalent capacity table

Max Power Input of each model is tabulated below

(Duo)

Model	CT24 NP2 * 2	CM24 N14 * 2	CV24 NJ2 * 2	CB24L N32 * 2
PI	4.60	4.60	4.60	4.60

(Trio)

Model	CT18 NQ2 * 3	CM18 N14 * 3	CV18 NJ2 * 3	CB18L N22 * 3
PI	5.20	5.20	5.20	5.20

(Quartet)

Model	CT12 NR2 * 4	CB12L N22 * 4
PI	4.82	4.82

Note

1. DB : Dry bulb temperature(℃), WB : Wet bulb temperature(℃)
2. TC : Total capacity(kW), SHC : Sensible Heating Capacity(kW)
3. PI : Power Input (kW, Compressor + indoor fan motor + outdoor fan motor)
4. All capacities are net. A deduction (cooling mode) or an addition (heating mode) of Capacity due to operating heat of indoor unit motor is reflected.
5. For Synchro model operating simultaneously with combinations, The individual capacities of indoor unit are not gived because they are same with the Single model capacities.
6. Direct interpolation is permissible. Do not extrapolate.
7. Rated capacities and power inputs are based on standard temperature and piping conditions, and it can be found on specifications table. Except for rated value, the performance is not guaranteed.
8. In accordance with the test standard(or nations), the rating will vary slightly.

7. Capacity tables

◆ Heating Capacity

■ ATNH42GMLE2 [UT42 NM2]

Outdoor Air Temp.	Indoor Air Temperature : °CDB											
	16.0		18.0		20.0		21.0		22.0		24.0	
°CWB	TC	PI	TC	PI	TC	PI	TC	PI	TC	PI	TC	PI
-15.0	10.96	6.21	10.86	6.31	10.78	6.42	10.75	6.48	10.73	6.55	10.63	6.66
-10.0	11.70	6.33	11.68	6.48	11.68	6.64	11.68	6.74	11.68	6.84	11.56	6.93
-5.0	13.07	6.01	13.09	6.19	13.09	6.36	13.09	6.45	13.09	6.54	12.93	6.63
0.0	14.37	5.61	14.36	5.77	14.32	5.92	14.29	6.00	14.25	6.08	14.17	6.13
6.0	15.66	5.29	15.55	5.43	15.40	5.53	15.30	5.59	15.19	5.63	15.17	5.67
10.0	16.68	5.16	16.47	5.26	16.36	5.34	16.36	5.38	16.34	5.40	16.07	5.42
15.0	17.12	4.90	17.07	4.96	17.09	4.98	16.99	4.99	16.85	4.99	16.75	5.01

■ UVNH42GLLA2 [UV42 NL2]

Outdoor Air Temp.	Indoor Air Temperature : °CDB											
	16.0		18.0		20.0		21.0		22.0		24.0	
°CWB	TC	PI	TC	PI	TC	PI	TC	PI	TC	PI	TC	PI
-15.0	10.96	6.39	10.86	6.49	10.78	6.60	10.75	6.66	10.73	6.74	10.63	6.85
-10.0	11.70	6.51	11.68	6.67	11.68	6.83	11.68	6.93	11.68	7.03	11.56	7.13
-5.0	13.07	6.18	13.09	6.36	13.09	6.55	13.09	6.64	13.09	6.73	12.93	6.81
0.0	14.37	5.77	14.36	5.93	14.32	6.09	14.29	6.17	14.25	6.25	14.17	6.31
6.0	15.66	5.44	15.55	5.58	15.40	5.69	15.30	5.75	15.19	5.79	15.17	5.83
10.0	16.68	5.31	16.47	5.41	16.36	5.49	16.36	5.53	16.34	5.56	16.07	5.57
15.0	17.12	5.04	17.07	5.10	17.09	5.12	16.99	5.13	16.85	5.13	16.75	5.16

■ ABNW42GM20 [UM42 N24]

Outdoor Air Temp.	Indoor Air Temperature : °CDB											
	16.0		18.0		20.0		21.0		22.0		24.0	
°CWB	TC	PI	TC	PI	TC	PI	TC	PI	TC	PI	TC	PI
-15.0	10.67	5.34	10.58	5.42	10.50	5.51	10.47	5.56	10.45	5.62	10.35	5.72
-10.0	11.39	5.43	11.38	5.56	11.38	5.70	11.38	5.79	11.38	5.87	11.26	5.95
-5.0	12.73	5.16	12.76	5.31	12.76	5.46	12.76	5.54	12.76	5.62	12.59	5.68
0.0	14.00	4.82	13.98	4.95	13.95	5.08	13.92	5.15	13.88	5.22	13.80	5.27
6.0	15.26	4.54	15.15	4.66	15.00	4.75	14.91	4.80	14.80	4.83	14.77	4.87
10.0	16.24	4.43	16.05	4.52	15.92	4.59	15.92	4.62	15.91	4.64	15.65	4.64
15.0	16.68	4.20	16.62	4.26	16.65	4.27	16.55	4.28	16.41	4.28	16.32	4.31

Note

1. DB : Dry bulb temperature(℃), WB : Wet bulb temperature(℃)
2. TC : Total capacity(kW), SHC : Sensible Heating Capacity(kW)
3. PI : Power Input (kW, Compressor + indoor fan motor + outdoor fan motor)
4. All capacities are net. A deduction (cooling mode) or an addition (heating mode) of Capacity due to operating heat of indoor unit motor is reflected.
5. Direct interpolation is permissible. Do not extrapolate.
6. Rated capacities and power inputs are based on standard temperature and piping conditions, and it can be found on specifications table. Except for rated value, the performance is not guaranteed.
7. In accordance with the test standard(or nations), the rating will vary slightly.

7. Capacity tables

■ 3Ø Synchro Equlvalent capacity table

Max Power Input of each model is tabulated below

(Duo)

Model	CT24 NP2 * 2	CM24 N14 * 2	CV24 NJ2 * 2	CB24L N32 * 2
PI	4.60	4.60	4.60	4.60

(Trio)

Model	CT18 NQ2 * 3	CM18 N14 * 3	CV18 NJ2 * 3	CB18L N22 * 3
PI	5.00	5.00	5.00	5.00

(Quartet)

Model	CT12 NR2 * 4	CB12L N22 * 4
PI	4.82	4.82

Note

1. DB : Dry bulb temperature(℃), WB : Wet bulb temperature(℃)
2. TC : Total capacity(kW), SHC : Sensible Heating Capacity(kW)
3. PI : Power Input (kW, Compressor + indoor fan motor + outdoor fan motor)
4. All capacities are net. A deduction (cooling mode) or an addition (heating mode) of Capacity due to operating heat of indoor unit motor is reflected.
5. For Synchro model operating simultaneously with combinations, The individual capacities of indoor unit are not gived because they are same with the Single model capacities.
6. Direct interpolation is permissible. Do not extrapolate.
7. Rated capacities and power inputs are based on standard temperature and piping conditions, and it can be found on specifications table. Except for rated value, the performance is not guaranteed.
8. In accordance with the test standard(or nations), the rating will vary slightly.

7.12 AUUW488D2 [UU49W U32]

◆ Cooling Capacity

■ ATNH48GMLE2 [UT48 NM2]

Outdoor Air Temp.	Indoor Air Temperature : °CDB / °CWB																	
	20.0 / 14.0			22.0 / 16.0			25.0 / 18.0			27.0 / 19.0			30.0 / 22.0			32.0 / 24.0		
°CDB	TC	SHC	PI	TC	SHC	PI	TC	SHC	PI	TC	SHC	PI	TC	SHC	PI	TC	SHC	PI
20.0	15.39	12.85	3.34	16.34	13.01	4.53	17.29	13.13	4.90	17.76	13.24	4.95	19.19	13.51	4.95	20.13	13.76	4.92
25.0	14.72	12.43	3.49	15.67	12.62	4.57	16.61	12.76	4.92	17.08	12.88	5.00	18.50	13.17	5.08	19.44	13.44	5.13
32.0	13.83	11.93	4.68	14.76	12.16	5.52	15.70	12.33	5.80	16.17	12.46	5.86	17.58	12.79	6.00	18.52	13.08	6.11
35.0	13.40	11.53	5.23	14.34	11.77	5.93	15.27	11.95	6.05	15.70	12.06	6.05	17.14	12.43	6.34	18.07	12.72	6.46
40.0	12.82	11.17	5.74	13.75	11.44	6.18	14.68	11.65	6.27	15.15	11.80	6.29	16.55	12.17	6.39	17.49	12.48	6.52
43.0	12.46	10.78	5.62	13.40	11.06	5.89	14.33	11.28	5.88	14.80	11.44	5.86	16.20	11.82	5.92	17.13	12.14	6.05
46.0	12.11	10.45	5.05	13.05	10.74	5.11	13.98	10.97	4.99	14.45	11.13	4.94	15.85	11.53	4.94	16.78	11.85	5.06

■ UVNH48GLLA2 [UV48 NL2]

Outdoor Air Temp.	Indoor Air Temperature : °CDB / °CWB																	
	20.0 / 14.0			22.0 / 16.0			25.0 / 18.0			27.0 / 19.0			30.0 / 22.0			32.0 / 24.0		
°CDB	TC	SHC	PI	TC	SHC	PI	TC	SHC	PI	TC	SHC	PI	TC	SHC	PI	TC	SHC	PI
20.0	14.32	11.44	3.21	15.20	11.59	4.36	16.08	11.69	4.71	16.52	11.79	4.77	17.84	12.02	4.77	18.72	12.25	4.74
25.0	13.69	11.07	3.36	14.57	11.24	4.40	15.45	11.36	4.74	15.89	11.47	4.81	17.20	11.73	4.89	18.08	11.96	4.94
32.0	12.86	10.62	4.51	13.73	10.82	5.32	14.60	10.97	5.58	15.04	11.10	5.65	16.35	11.39	5.78	17.22	11.65	5.89
35.0	12.46	10.26	5.03	13.33	10.47	5.71	14.20	10.64	5.82	14.60	10.74	5.82	15.94	11.07	6.10	16.81	11.33	6.23
40.0	11.92	9.95	5.53	12.79	10.19	5.95	13.66	10.37	6.04	14.09	10.51	6.05	15.39	10.84	6.15	16.26	11.11	6.28
43.0	11.59	9.60	5.41	12.46	9.85	5.67	13.33	10.04	5.66	13.76	10.18	5.65	15.06	10.52	5.70	15.93	10.80	5.83
46.0	11.26	9.30	4.86	12.13	9.56	4.92	13.00	9.77	4.80	13.43	9.91	4.76	14.74	10.27	4.76	15.60	10.55	4.87

■ ABNW48GM30 [UM48 N34]

Outdoor Air Temp.	Indoor Air Temperature : °CDB / °CWB																	
	20.0 / 14.0			22.0 / 16.0			25.0 / 18.0			27.0 / 19.0			30.0 / 22.0			32.0 / 24.0		
°CDB	TC	SHC	PI	TC	SHC	PI	TC	SHC	PI	TC	SHC	PI	TC	SHC	PI	TC	SHC	PI
20.0	15.10	13.45	3.31	16.03	13.63	4.34	16.96	13.74	4.70	17.42	13.87	4.75	18.82	14.14	4.75	19.75	14.40	4.84
25.0	14.44	13.02	4.03	15.37	13.22	4.60	16.29	13.36	4.72	16.76	13.49	4.79	18.14	13.79	4.87	19.07	14.07	4.92
32.0	13.56	12.49	4.61	14.48	12.73	5.30	15.40	12.91	5.56	15.86	13.05	5.63	17.24	13.40	5.76	18.16	13.70	5.87
35.0	13.15	12.07	5.01	14.06	12.32	5.69	14.98	12.51	5.90	15.40	12.63	5.95	16.81	13.02	6.08	17.73	13.32	6.20
40.0	12.57	11.70	5.51	13.49	11.98	5.93	14.40	12.20	6.02	14.86	12.36	6.03	16.24	12.75	6.13	17.15	13.07	6.26
43.0	12.23	11.29	5.53	13.14	11.58	5.79	14.06	11.81	5.78	14.52	11.97	5.77	15.89	12.38	5.83	16.81	12.71	5.96
46.0	11.88	10.94	4.84	12.80	11.24	4.90	13.71	11.49	4.91	14.17	11.66	4.86	15.54	12.07	4.86	16.46	12.41	4.98

■ APNH48GTLA0 [UP48 NT2]

Outdoor Air Temp.	Indoor Air Temperature : °CDB / °CWB																	
	20.0 / 14.0			22.0 / 16.0			25.0 / 18.0			27.0 / 19.0			30.0 / 22.0			32.0 / 24.0		
°CDB	TC	SHC	PI	TC	SHC	PI	TC	SHC	PI	TC	SHC	PI	TC	SHC	PI	TC	SHC	PI
20.0	14.94	11.63	2.61	15.86	11.79	3.54	16.77	11.88	3.83	17.24	11.99	3.86	18.61	12.24	3.86	19.54	12.45	3.84
25.0	14.28	11.26	2.73	15.19	11.44	3.56	16.11	11.55	3.84	16.58	11.67	3.89	17.94	11.94	3.98	18.86	12.17	4.01
32.0	13.42	10.80	3.66	14.32	11.01	4.31	15.23	11.16	4.52	15.68	11.30	4.57	17.05	11.58	4.69	17.96	11.85	4.77
35.0	13.01	10.44	4.07	13.91	10.66	4.64	14.82	10.82	4.72	15.20	10.90	4.70	16.64	11.26	4.96	17.53	11.53	5.04
40.0	12.44	10.12	4.47	13.34	10.36	4.82	14.24	10.55	4.89	14.71	10.69	4.91	16.05	11.03	4.99	16.97	11.32	5.09
43.0	12.09	9.77	4.39	12.99	10.02	4.59	13.91	10.21	4.59	14.35	10.36	4.57	15.72	10.71	4.62	16.62	11.00	4.72
46.0	11.74	9.47	3.94	12.66	9.73	3.99	13.55	9.93	3.89	14.02	10.09	3.86	15.37	10.44	3.86	16.29	10.73	3.96

Note

1. DB : Dry bulb temperature(℃), WB : Wet bulb temperature(℃)
2. TC : Total capacity(kW), SHC : Sensible Heating Capacity(kW)
3. PI : Power Input (kW, Compressor + indoor fan motor + outdoor fan motor)
4. All capacities are net. A deduction (cooling mode) or an addition (heating mode) of Capacity due to operating heat of indoor unit motor is reflected.
5. Direct interpolation is permissible. Do not extrapolate.
6. Rated capacities and power inputs are based on standard temperature and piping conditions, and it can be found on specifications table. Except for rated value, the performance is not guaranteed.
7. In accordance with the test standard(or nations), the rating will vary slightly.

7. Capacity tables

■ 3Ø Synchro Equlvalent capacity table

Max Power Input of each model is tabulated below

(Duo)

Model	CT24 NP2 * 2	CM24 N14 * 2	CV24 NJ2 * 2	CB24L N32 * 2
PI	5.06	5.06	5.06	5.06

(Trio)

Model	CT18 NQ2 * 3	CM18 N14 * 3	CV18 NJ2 * 3	CB18L N22 * 3
PI	5.72	5.72	5.72	5.72

(Quartet)

Model	CT12 NR2 * 4	CB12L N22 * 4
PI	5.12	5.12

Note

1. DB : Dry bulb temperature(℃), WB : Wet bulb temperature(℃)
2. TC : Total capacity(kW), SHC : Sensible Heating Capacity(kW)
3. PI : Power Input (kW, Compressor + indoor fan motor + outdoor fan motor)
4. All capacities are net. A deduction (cooling mode) or an addition (heating mode) of Capacity due to operating heat of indoor unit motor is reflected.
5. For Synchro model operating simultaneously with combinations, The individual capacities of indoor unit are not gived because they are same with the Single model capacities.
6. Direct interpolation is permissible. Do not extrapolate.
7. Rated capacities and power inputs are based on standard temperature and piping conditions, and it can be found on specifications table. Except for rated value, the performance is not guaranteed.
8. In accordance with the test standard(or nations), the rating will vary slightly.

7. Capacity tables

◆ Heating Capacity

■ ATNH48GMLE2 [UT48 NM2]

Outdoor Air Temp.	Indoor Air Temperature : °CDB											
	16.0		18.0		20.0		21.0		22.0		24.0	
°CWB	TC	PI	TC	PI	TC	PI	TC	PI	TC	PI	TC	PI
-15.0	12.52	7.48	12.41	7.59	12.32	7.73	12.29	7.80	12.27	7.89	12.15	8.02
-10.0	13.37	7.62	13.35	7.81	13.35	8.00	13.35	8.11	13.35	8.23	13.22	8.34
-5.0	14.94	7.24	14.96	7.45	14.96	7.66	14.96	7.77	14.96	7.88	14.78	7.98
0.0	16.43	6.76	16.41	6.94	16.37	7.13	16.33	7.22	16.29	7.32	16.19	7.39
6.0	17.90	6.37	17.77	6.53	17.60	6.66	17.49	6.73	17.36	6.78	17.34	6.83
10.0	19.06	6.22	18.82	6.34	18.69	6.43	18.69	6.48	18.67	6.51	18.36	6.52
15.0	19.57	5.90	19.50	5.97	19.54	6.00	19.42	6.01	19.25	6.01	19.14	6.04

■ UVNH48GLLA2 [UV48 NL2]

Outdoor Air Temp.	Indoor Air Temperature : °CDB											
	16.0		18.0		20.0		21.0		22.0		24.0	
°CWB	TC	PI	TC	PI	TC	PI	TC	PI	TC	PI	TC	PI
-15.0	12.52	7.64	12.41	7.76	12.32	7.90	12.29	7.96	12.27	8.06	12.15	8.19
-10.0	13.37	7.78	13.35	7.98	13.35	8.17	13.35	8.29	13.35	8.41	13.22	8.52
-5.0	14.94	7.39	14.96	7.61	14.96	7.83	14.96	7.94	14.96	8.05	14.78	8.15
0.0	16.43	6.90	16.41	7.09	16.37	7.28	16.33	7.38	16.29	7.47	16.19	7.55
6.0	17.90	6.51	17.77	6.67	17.60	6.81	17.49	6.87	17.36	6.92	17.34	6.97
10.0	19.06	6.35	18.82	6.47	18.69	6.57	18.69	6.62	18.67	6.65	18.36	6.66
15.0	19.57	6.03	19.50	6.10	19.54	6.13	19.42	6.14	19.25	6.14	19.14	6.17

■ ABNW48GM3A0 [UM48 N34]

Outdoor Air Temp.	Indoor Air Temperature : °CDB											
	16.0		18.0		20.0		21.0		22.0		24.0	
°CWB	TC	PI	TC	PI	TC	PI	TC	PI	TC	PI	TC	PI
-15.0	13.68	5.33	13.55	5.41	13.45	5.51	13.42	5.56	13.40	5.63	13.24	5.76
-10.0	14.40	5.20	14.38	5.33	14.37	5.47	14.37	5.54	14.37	5.62	14.24	5.78
-5.0	15.61	5.44	15.62	5.60	15.63	5.76	15.63	5.84	15.63	5.92	15.44	6.09
0.0	16.67	5.85	16.66	6.02	16.62	6.18	16.58	6.25	16.53	6.33	16.40	6.48
6.0	18.50	6.26	18.38	6.41	18.20	6.54	18.09	6.60	17.95	6.66	17.81	6.77
10.0	19.55	6.51	19.31	6.64	19.18	6.74	19.18	6.78	19.15	6.82	18.83	6.88
15.0	21.21	6.94	21.15	7.01	21.19	7.06	21.05	7.07	20.87	7.07	20.63	7.12

■ APNH48GTLA0 [UP48 NT2]

Outdoor Air Temp.	Indoor Air Temperature : °CDB											
	16.0		18.0		20.0		21.0		22.0		24.0	
°CWB	TC	PI	TC	PI	TC	PI	TC	PI	TC	PI	TC	PI
-15.0	12.14	5.81	12.04	5.91	11.95	6.01	11.92	6.06	11.90	6.13	11.79	6.23
-10.0	12.97	5.92	12.95	6.07	12.95	6.22	12.95	6.31	12.95	6.40	12.82	6.49
-5.0	14.49	5.62	14.51	5.79	14.51	5.96	14.51	6.04	14.51	6.12	14.34	6.20
0.0	15.94	5.25	15.92	5.40	15.88	5.54	15.84	5.61	15.80	5.69	15.70	5.74
6.0	17.36	4.95	17.24	5.08	17.10	5.20	16.97	5.23	16.84	5.27	16.82	5.31
10.0	18.49	4.83	18.26	4.92	18.13	5.00	18.13	5.03	18.11	5.06	17.81	5.07
15.0	18.98	4.59	18.92	4.64	18.95	4.66	18.84	4.67	18.67	4.67	18.57	4.70

Note

1. DB : Dry bulb temperature(℃), WB : Wet bulb temperature(℃)
2. TC : Total capacity(kW), SHC : Sensible Heating Capacity(kW)
3. PI : Power Input (kW, Compressor + indoor fan motor + outdoor fan motor)
4. All capacities are net. A deduction (cooling mode) or an addition (heating mode) of Capacity due to operating heat of indoor unit motor is reflected.
5. Direct interpolation is permissible. Do not extrapolate.
6. Rated capacities and power inputs are based on standard temperature and piping conditions, and it can be found on specifications table. Except for rated value, the performance is not guaranteed.
7. In accordance with the test standard(or nations), the rating will vary slightly.

7. Capacity tables

■ 3Ø Synchro Equlvalent capacity table

Max Power Input of each model is tabulated below

(Duo)

Model	CT24 NP2 * 2	CM24 N14 * 2	CV24 NJ2 * 2	CB24L N32 * 2
PI	5.06	5.06	5.06	5.06

(Trio)

Model	CT18 NQ2 * 3	CM18 N14 * 3	CV18 NJ2 * 3	CB18L N22 * 3
PI	5.50	5.50	5.50	5.50

(Quartet)

Model	CT12 NR2 * 4	CB12L N22 * 4
PI	5.22	5.22

Note

1. DB : Dry bulb temperature(℃), WB : Wet bulb temperature(℃)
2. TC : Total capacity(kW), SHC : Sensible Heating Capacity(kW)
3. PI : Power Input (kW, Compressor + indoor fan motor + outdoor fan motor)
4. All capacities are net. A deduction (cooling mode) or an addition (heating mode) of Capacity due to operating heat of indoor unit motor is reflected.
5. For Synchro model operating simultaneously with combinations, The individual capacities of indoor unit are not gived because they are same with the Single model capacities.
6. Direct interpolation is permissible. Do not extrapolate.
7. Rated capacities and power inputs are based on standard temperature and piping conditions, and it can be found on specifications table. Except for rated value, the performance is not guaranteed.
8. In accordance with the test standard(or nations), the rating will vary slightly.

7.13 AUUW608WD2 [UU61W U32]

◆ Cooling Capacity

■ ATNH60GMLE2 [UT60 NM2]

Outdoor Air Temp.	Indoor Air Temperature : °CDB / °CWB																	
	20.0 / 14.0			22.0 / 16.0			25.0 / 18.0			27.0 / 19.0			30.0 / 22.0			32.0 / 24.0		
°CDB	TC	SHC	PI	TC	SHC	PI	TC	SHC	PI	TC	SHC	PI	TC	SHC	PI	TC	SHC	PI
20.0	15.98	12.76	4.10	16.97	12.92	5.57	17.95	13.03	6.02	18.44	13.15	6.09	19.92	13.41	6.09	20.90	13.66	6.05
25.0	15.29	12.34	4.29	16.27	12.53	5.61	17.25	12.67	6.05	17.74	12.79	6.14	19.20	13.08	6.25	20.18	13.34	6.30
32.0	14.35	11.84	5.76	15.33	12.07	6.79	16.30	12.24	7.13	16.79	12.38	7.21	18.25	12.71	7.38	19.23	12.99	7.52
35.0	13.92	11.44	6.42	14.89	11.68	7.29	15.86	11.86	7.43	16.30	11.98	7.43	17.79	12.35	7.79	18.76	12.64	7.95
40.0	13.31	11.10	7.06	14.28	11.36	7.60	15.25	11.57	7.71	15.73	11.72	7.73	17.18	12.09	7.85	18.15	12.40	8.02
43.0	12.94	10.71	6.91	13.91	10.98	7.23	14.88	11.20	7.22	15.36	11.36	7.21	16.82	11.74	7.28	17.79	12.05	7.44
46.0	12.57	10.37	6.20	13.54	10.66	6.28	14.51	10.89	6.13	15.00	11.05	6.07	16.45	11.45	6.08	17.42	11.77	6.22

■ UVNH60GLLA2 [UV60 NL2]

Outdoor Air Temp.	Indoor Air Temperature : °CDB / °CWB																	
	20.0 / 14.0			22.0 / 16.0			25.0 / 18.0			27.0 / 19.0			30.0 / 22.0			32.0 / 24.0		
°CDB	TC	SHC	PI	TC	SHC	PI	TC	SHC	PI	TC	SHC	PI	TC	SHC	PI	TC	SHC	PI
20.0	15.39	11.96	3.86	16.34	12.12	5.24	17.29	12.22	5.66	17.76	12.33	5.73	19.19	12.58	5.73	20.13	12.81	5.70
25.0	14.72	11.57	4.04	15.67	11.75	5.29	16.61	11.88	5.70	17.08	12.00	5.78	18.50	12.27	5.88	19.44	12.51	5.93
32.0	13.83	11.11	5.42	14.76	11.32	6.39	15.70	11.48	6.71	16.17	11.61	6.79	17.58	11.91	6.95	18.52	12.18	7.07
35.0	13.40	10.73	6.05	14.34	10.96	6.87	15.27	11.13	7.00	15.70	11.23	7.00	17.14	11.58	7.33	18.07	11.85	7.48
40.0	12.82	10.41	6.64	13.75	10.65	7.16	14.68	10.85	7.26	15.15	10.99	7.28	16.55	11.34	7.39	17.49	11.62	7.55
43.0	12.46	10.04	6.51	13.40	10.30	6.81	14.33	10.50	6.80	14.80	10.65	6.79	16.20	11.01	6.85	17.13	11.30	7.00
46.0	12.11	9.73	5.84	13.05	10.00	5.91	13.98	10.22	5.77	14.45	10.37	5.72	15.85	10.74	5.72	16.78	11.04	5.86

■ ABNW60GM3A0 [UM60 N34]

Outdoor Air Temp.	Indoor Air Temperature : °CDB / °CWB																	
	20.0 / 14.0			22.0 / 16.0			25.0 / 18.0			27.0 / 19.0			30.0 / 22.0			32.0 / 24.0		
°CDB	TC	SHC	PI	TC	SHC	PI	TC	SHC	PI	TC	SHC	PI	TC	SHC	PI	TC	SHC	PI
20.0	15.98	14.41	3.63	16.97	14.60	4.75	17.95	14.73	5.14	18.44	14.85	5.20	19.92	15.15	5.20	20.90	15.43	5.30
25.0	15.29	13.94	4.41	16.27	14.16	5.03	17.25	14.31	5.17	17.74	14.45	5.24	19.20	14.78	5.33	20.18	15.07	5.38
32.0	14.35	13.38	5.04	15.33	13.64	5.80	16.30	13.83	6.09	16.79	13.98	6.16	18.25	14.35	6.30	19.23	14.68	6.42
35.0	13.92	12.93	5.49	14.89	13.20	6.23	15.86	13.40	6.46	16.30	13.53	6.51	17.79	13.95	6.65	18.76	14.28	6.79
40.0	13.31	12.54	6.02	14.28	12.84	6.49	15.25	13.07	6.58	15.73	13.24	6.60	17.18	13.66	6.70	18.15	14.00	6.85
43.0	12.94	12.10	6.05	13.91	12.41	6.34	14.88	12.65	6.33	15.36	12.83	6.31	16.82	13.26	6.38	17.79	13.61	6.52
46.0	12.57	11.72	5.30	13.54	12.05	5.36	14.51	12.31	5.37	15.00	12.49	5.32	16.45	12.94	5.32	17.42	13.30	5.45

Note

1. DB : Dry bulb temperature(℃), WB : Wet bulb temperature(℃)
2. TC : Total capacity(kW), SHC : Sensible Heating Capacity(kW)
3. PI : Power Input (kW, Compressor + indoor fan motor + outdoor fan motor)
4. All capacities are net. A deduction (cooling mode) or an addition (heating mode) of Capacity due to operating heat of indoor unit motor is reflected.
5. Direct interpolation is permissible. Do not extrapolate.
6. Rated capacities and power inputs are based on standard temperature and piping conditions, and it can be found on specifications table. Except for rated value, the performance is not guaranteed.
7. In accordance with the test standard(or nations), the rating will vary slightly.

7. Capacity tables

■ 3Ø Synchro Equlvalent capacity table

Max Power Input of each model is tabulated below

(Duo)

Model	UT30 NP2 * 2	UM30 N14 * 2	UV30 NJ2 * 2
PI	5.80	5.80	5.80

(Trio)

Model	CT18 NQ2 * 3	CM18 N14 * 3	CV18 NJ2 * 3	CB18L N22 * 3
PI	5.20	5.20	5.20	5.20

(Quartet)

Model	CT12 NR2 * 4	CB12L N22 * 4
PI	4.82	4.82

Note

1. DB : Dry bulb temperature(℃), WB : Wet bulb temperature(℃)
2. TC : Total capacity(kW), SHC : Sensible Heating Capacity(kW)
3. PI : Power Input (kW, Compressor + indoor fan motor + outdoor fan motor)
4. All capacities are net. A deduction (cooling mode) or an addition (heating mode) of Capacity due to operating heat of indoor unit motor is reflected.
5. For Synchro model operating simultaneously with combinations, The individual capacities of indoor unit are not gived because they are same with the Single model capacities.
6. Direct interpolation is permissible. Do not extrapolate.
7. Rated capacities and power inputs are based on standard temperature and piping conditions, and it can be found on specifications table. Except for rated value, the performance is not guaranteed.
8. In accordance with the test standard(or nations), the rating will vary slightly.

7. Capacity tables

◆ Heating Capacity

■ ATNH60GMLE2 [UT60 NM2]

Outdoor Air Temp.	Indoor Air Temperature : °CDB											
	16.0		18.0		20.0		21.0		22.0		24.0	
°CWB	TC	PI	TC	PI	TC	PI	TC	PI	TC	PI	TC	PI
-15.0	13.31	9.06	13.18	9.19	13.09	9.36	13.06	9.44	13.03	9.55	12.91	9.71
-10.0	14.20	9.22	14.18	9.45	14.18	9.68	14.18	9.82	14.18	9.96	14.04	10.10
-5.0	15.87	8.76	15.90	9.02	15.90	9.27	15.90	9.40	15.90	9.53	15.70	9.66
0.0	17.45	8.18	17.44	8.41	17.39	8.63	17.35	8.74	17.30	8.85	17.21	8.94
6.0	19.01	7.71	18.88	7.91	18.70	8.07	18.58	8.14	18.45	8.20	18.42	8.26
10.0	20.25	7.52	20.00	7.67	19.86	7.78	19.86	7.84	19.84	7.88	19.51	7.89
15.0	20.79	7.14	20.72	7.23	20.76	7.26	20.63	7.28	20.46	7.28	20.34	7.31

■ UVNH60GLLA2 [UV60 NL2]

Outdoor Air Temp.	Indoor Air Temperature : °CDB											
	16.0		18.0		20.0		21.0		22.0		24.0	
°CWB	TC	PI	TC	PI	TC	PI	TC	PI	TC	PI	TC	PI
-15.0	13.31	8.83	13.18	8.96	13.09	9.12	13.06	9.20	13.03	9.31	12.91	9.47
-10.0	14.20	8.99	14.18	9.22	14.18	9.44	14.18	9.58	14.18	9.72	14.04	9.85
-5.0	15.87	8.54	15.90	8.79	15.90	9.04	15.90	9.17	15.90	9.30	15.70	9.42
0.0	17.45	7.98	17.44	8.20	17.39	8.42	17.35	8.53	17.30	8.63	17.21	8.72
6.0	19.01	7.52	18.88	7.71	18.70	7.87	18.58	7.94	18.45	8.00	18.42	8.06
10.0	20.25	7.34	20.00	7.48	19.86	7.59	19.86	7.64	19.84	7.68	19.51	7.70
15.0	20.79	6.97	20.72	7.05	20.76	7.08	20.63	7.09	20.46	7.09	20.34	7.13

■ ABNW60GM3A0 [UM60 N34]

Outdoor Air Temp.	Indoor Air Temperature : °CDB											
	16.0		18.0		20.0		21.0		22.0		24.0	
°CWB	TC	PI	TC	PI	TC	PI	TC	PI	TC	PI	TC	PI
-15.0	14.06	5.45	13.92	5.54	13.82	5.64	13.79	5.69	13.77	5.75	13.60	5.89
-10.0	14.79	5.32	14.77	5.45	14.76	5.60	14.77	5.67	14.77	5.75	14.63	5.92
-5.0	16.03	5.57	16.05	5.73	16.06	5.89	16.06	5.98	16.05	6.06	15.86	6.23
0.0	17.13	5.98	17.12	6.15	17.07	6.32	17.04	6.40	16.99	6.48	16.85	6.63
6.0	19.01	6.40	18.88	6.55	18.70	6.69	18.58	6.75	18.45	6.81	18.30	6.92
10.0	20.09	6.66	19.84	6.79	19.70	6.89	19.70	6.94	19.68	6.98	19.35	7.04
15.0	21.80	7.10	21.73	7.18	21.77	7.22	21.63	7.23	21.45	7.23	21.20	7.28

Note

1. DB : Dry bulb temperature(℃), WB : Wet bulb temperature(℃)
2. TC : Total capacity(kW), SHC : Sensible Heating Capacity(kW)
3. PI : Power Input (kW, Compressor + indoor fan motor + outdoor fan motor)
4. All capacities are net. A deduction (cooling mode) or an addition (heating mode) of Capacity due to operating heat of indoor unit motor is reflected.
5. Direct interpolation is permissible. Do not extrapolate.
6. Rated capacities and power inputs are based on standard temperature and piping conditions, and it can be found on specifications table. Except for rated value, the performance is not guaranteed.
7. In accordance with the test standard(or nations), the rating will vary slightly.

7. Capacity tables

■ 3Ø Synchro Equlvalent capacity table

Max Power Input of each model is tabulated below

(Duo)

Model	UT30 NP2 * 2	UM30 N14 * 2	UV30 NJ2 * 2
PI	5.70	5.70	5.70

(Trio)

Model	CT18 NQ2 * 3	CM18 N14 * 3	CV18 NJ2 * 3	CB18L N22 * 3
PI	5.00	5.00	5.00	5.00

(Quartet)

Model	CT12 NR2 * 4	CB12L N22 * 4
PI	4.82	4.82

Note

1. DB : Dry bulb temperature(℃), WB : Wet bulb temperature(℃)
2. TC : Total capacity(kW), SHC : Sensible Heating Capacity(kW)
3. PI : Power Input (kW, Compressor + indoor fan motor + outdoor fan motor)
4. All capacities are net. A deduction (cooling mode) or an addition (heating mode) of Capacity due to operating heat of indoor unit motor is reflected.
5. For Synchro model operating simultaneously with combinations, The individual capacities of indoor unit are not gived because they are same with the Single model capacities.
6. Direct interpolation is permissible. Do not extrapolate.
7. Rated capacities and power inputs are based on standard temperature and piping conditions, and it can be found on specifications table. Except for rated value, the performance is not guaranteed.
8. In accordance with the test standard(or nations), the rating will vary slightly.

7.14 AUUW70LAE [UU70W U34]

◆ Cooling Capacity

■ ABNW70GB9A0 [UB70 N94]

Outdoor Air Temp.	Indoor Air Temperature : °CDB / °CWB																	
	20.0 / 14.0			22.0 / 16.0			25.0 / 18.0			27.0 / 19.0			30.0 / 22.0			32.0 / 24.0		
°CDB	TC	SHC	PI	TC	SHC	PI	TC	SHC	PI	TC	SHC	PI	TC	SHC	PI	TC	SHC	PI
20.0	13.33	13.15	3.33	16.68	15.47	4.41	19.23	17.79	5.48	21.17	18.95	5.69	23.11	18.62	5.90	24.59	18.40	5.94
25.0	12.60	12.60	3.65	15.96	15.08	4.77	18.51	17.40	5.92	20.45	18.56	6.13	22.39	18.23	6.34	23.86	18.01	6.38
32.0	11.59	11.59	4.17	14.94	14.54	5.29	17.49	16.86	6.53	19.43	18.02	6.74	21.37	17.68	6.95	22.85	17.46	6.99
35.0	11.15	11.15	4.39	14.51	14.31	5.51	17.06	16.62	6.79	19.00	17.78	7.00	20.94	17.45	7.21	22.42	17.23	7.25
40.0	10.43	10.43	4.75	13.78	13.78	5.87	14.71	14.62	5.69	16.44	15.65	5.86	18.17	15.34	6.03	19.49	15.13	6.07
43.0	9.99	9.99	4.97	13.35	13.35	6.09	13.30	13.30	5.03	14.91	14.34	5.18	16.52	14.05	5.33	17.74	13.86	5.36
46.0	9.56	9.56	5.19	12.92	12.92	6.31	11.89	11.89	4.38	13.37	13.00	4.50	14.86	12.74	4.62	15.98	12.57	4.64
48.0	9.27	9.27	5.34	12.63	12.63	6.46	10.95	10.95	3.94	12.35	12.10	4.04	13.75	11.86	4.15	14.81	11.70	4.17

- **Rate of change in TC and PI due to the indoor unit at standard temperature condition.**

Model		Correction factor	
		TC	PI
ABNW70GB9A0 [UB70 N94]	Max.	1.10	1.39
	Rated	1.00	1.00

■ 3Ø Synchro Equlvalent capacity table

Max Power Input of each model is tabulated below

(Duo)

Model	UT36 NN2 * 2	UM36 N24 * 2	UV36 NK2 * 2
PI	8.71	8.71	8.71

(Trio)

Model	CT24 NP2 * 3	CM24 N14 * 3	CB24L N32 * 3	CV24 NJ2 * 3
PI	8.26	8.26	8.26	8.26

(Quartet)

Model	CT18 NQ2 * 4	CM18 N14 * 4	CB18L N22 * 4	CV18 NJ2 * 4
PI	7.84	7.84	7.84	7.84

Note

1. DB : Dry bulb temperature(℃), WB : Wet bulb temperature(℃)
2. TC : Total capacity(kW), SHC : Sensible Heating Capacity(kW)
3. PI : Power Input (kW, Compressor + indoor fan motor + outdoor fan motor)
4. All capacities are net. A deduction (cooling mode) or an addition (heating mode) of Capacity due to operating heat of indoor unit motor is reflected.
5. For Synchro model operating simultaneously with combinations, The individual capacities of indoor unit are not gived because they are same with the Single model capacities.
6. Direct interpolation is permissible. Do not extrapolate.
7. Rated capacities and power inputs are based on standard temperature and piping conditions, and it can be found on specifications table. Except for rated value, the performance is not guaranteed.
8. In accordance with the test standard(or nations), the rating will vary slightly.

7. Capacity tables

◆ Heating Capacity

■ ABNW70GB9A0 [UB70 N94]

Outdoor Air Temp.	Indoor Air Temperature : °CDB									
	16.0		18.0		20.0		22.0		24.0	
°CWB	TC	PI	TC	PI	TC	PI	TC	PI	TC	PI
-20.0	10.25	2.35	10.16	2.88	10.07	3.41	9.98	4.24	9.90	5.06
-15.0	13.34	3.41	13.24	3.95	13.15	4.48	13.06	5.21	12.98	5.94
-10.0	16.42	4.48	16.33	5.01	16.23	5.55	16.15	6.18	16.06	6.81
-5.0	19.51	5.55	19.41	6.08	19.32	6.61	19.23	7.15	19.15	7.68
0.0	22.59	6.61	22.49	7.15	22.40	7.68	21.50	7.24	20.61	6.81
6.0	24.80	7.04	23.60	6.72	22.40	6.40	21.50	6.08	20.61	5.76
10.0	24.80	6.61	23.60	6.08	22.40	5.55	21.50	5.30	20.61	5.06
15.0	24.80	5.55	23.60	5.01	22.40	4.48	21.50	4.34	20.61	4.19
18.0	24.80	4.91	23.60	4.37	22.40	3.84	21.50	3.75	20.61	3.67

- **Rate of change in TC and PI due to the indoor unit at standard temperature condition.**

Model		Correction factor	
		TC	PI
ABNW70GB9A0 [UB70 N94]	Max.	1.10	1.21
	Rated	1.00	1.00

■ 3Ø Synchro Equlvalent capacity table

Max Power Input of each model is tabulated below

(Duo)

Model	UT36 NN2 * 2	UM36 N24 * 2	UV36 NK2 * 2
PI	7.86	7.86	7.86

(Trio)

Model	CT24 NP2 * 3	CM24 N14 * 3	CB24L N32 * 3	CV24 NJ2 * 3
PI	7.46	7.46	7.46	7.46

(Quartet)

Model	CT18 NQ2 * 4	CM18 N14 * 4	CB18L N22 * 4	CV18 NJ2 * 4
PI	7.07	7.07	7.07	7.07

Note

1. DB : Dry bulb temperature(℃), WB : Wet bulb temperature(℃)
2. TC : Total capacity(kW), SHC : Sensible Heating Capacity(kW)
3. PI : Power Input (kW, Compressor + indoor fan motor + outdoor fan motor)
4. All capacities are net. A deduction (cooling mode) or an addition (heating mode) of Capacity due to operating heat of indoor unit motor is reflected.
5. For Synchro model operating simultaneously with combinations, The individual capacities of indoor unit are not gived because they are same with the Single model capacities.
6. Direct interpolation is permissible. Do not extrapolate.
7. Rated capacities and power inputs are based on standard temperature and piping conditions, and it can be found on specifications table. Except for rated value, the performance is not guaranteed.
8. In accordance with the test standard(or nations), the rating will vary slightly.

7.15 AUUW85LAE [UU85W U74]

◆ Cooling Capacity

■ ABMW85GB9A0 [UU85 N94]

Outdoor Air Temp.	Indoor Air Temperature : °CDB / °CWB																	
	20.0 / 14.0			22.0 / 16.0			25.0 / 18.0			27.0 / 19.0			30.0 / 22.0			32.0 / 24.0		
°CDB	TC	SHC	PI	TC	SHC	PI	TC	SHC	PI	TC	SHC	PI	TC	SHC	PI	TC	SHC	PI
20.0	16.13	14.46	3.90	20.19	17.01	5.16	23.28	19.56	6.41	25.63	20.83	6.66	27.98	20.47	6.91	29.76	20.22	6.95
25.0	15.26	14.03	4.27	19.32	16.58	5.59	22.41	19.13	6.92	24.75	20.41	7.17	27.10	20.04	7.42	28.89	19.79	7.46
32.0	14.03	13.43	4.88	18.09	15.98	6.19	21.18	18.53	7.64	23.53	19.81	7.88	25.87	19.44	8.13	27.66	19.20	8.18
35.0	13.50	13.18	5.13	17.56	15.73	6.44	20.65	18.28	7.94	23.00	19.55	8.19	25.35	19.18	8.44	27.13	18.94	8.49
40.0	12.62	12.62	5.56	16.69	15.30	6.87	19.77	17.85	8.45	22.12	19.12	8.70	24.47	18.75	8.95	26.26	18.51	9.00
43.0	12.10	12.10	5.82	16.16	15.04	7.13	19.25	17.59	8.76	21.60	18.86	9.01	23.95	18.50	9.25	25.73	18.25	9.30
46.0	11.57	11.57	6.08	15.63	14.78	7.39	16.88	15.62	8.23	18.99	16.77	8.45	21.10	16.44	8.68	22.71	16.21	8.72
48.0	11.22	11.22	6.25	15.28	14.61	7.56	15.29	14.29	7.87	17.25	15.35	8.08	19.21	15.04	8.29	20.69	14.84	8.33

- **Rate of change in TC and PI due to the indoor unit at standard temperature condition.**

Model		Correction factor	
		TC	PI
ABMW85GB9A0 [UU85 N94]	Max.	1.10	1.39
	Rated	1.00	1.00

■ 3Ø Synchro Equlvalent capacity table

Max Power Input of each model is tabulated below

(Duo)

Model	UT42 NM2 * 2	UM42 N24 * 2	UV42 NL2 * 2
PI	8.61	8.61	8.61

(Trio)

Model	CT24 NP2 * 3	CM24 N14 * 3	CB24L N32 * 3	CV24 NJ2 * 3
PI	8.18	8.18	8.18	8.18

(Quartet)

Model	CT18 NQ2 * 4	CM18 N14 * 4	CB18L N22 * 4	CV18 NJ2 * 4
PI	7.75	7.75	7.75	7.75

Note

1. DB : Dry bulb temperature(℃), WB : Wet bulb temperature(℃)
2. TC : Total capacity(kW), SHC : Sensible Heating Capacity(kW)
3. PI : Power Input (kW, Compressor + indoor fan motor + outdoor fan motor)
4. All capacities are net. A deduction (cooling mode) or an addition (heating mode) of Capacity due to operating heat of indoor unit motor is reflected.
5. For Synchro model operating simultaneously with combinations, The individual capacities of indoor unit are not gived because they are same with the Single model capacities.
6. Direct interpolation is permissible. Do not extrapolate.
7. Rated capacities and power inputs are based on standard temperature and piping conditions, and it can be found on specifications table. Except for rated value, the performance is not guaranteed.
8. In accordance with the test standard(or nations), the rating will vary slightly.

7. Capacity tables

◆ Heating Capactiy

■ ABMW85GB9A0 [UU85 N94]

Outdoor Air Temp.	Indoor Air Temperature : °CDB									
	16.0		18.0		20.0		22.0		24.0	
°CWB	TC	PI	TC	PI	TC	PI	TC	PI	TC	PI
-20.0	13.42	4.36	13.30	4.88	13.18	5.40	13.07	6.06	12.96	6.73
-15.0	16.87	5.40	16.75	5.92	16.63	6.44	16.53	7.05	16.42	7.67
-10.0	20.33	6.44	20.21	6.96	20.09	7.48	19.98	8.05	19.87	8.61
-5.0	23.78	7.48	23.66	8.00	23.54	8.52	23.44	9.04	23.33	9.56
0.0	27.24	8.52	27.12	9.04	27.00	9.56	25.92	9.08	24.84	8.61
6.0	29.89	9.14	28.45	8.73	27.00	8.31	25.92	7.90	24.84	7.48
10.0	29.89	8.52	28.45	8.00	27.00	7.48	25.92	7.10	24.84	6.73
15.0	29.89	7.48	28.45	6.96	27.00	6.44	25.92	6.11	24.84	5.78
18.0	29.89	6.86	28.45	6.34	27.00	5.82	25.92	5.52	24.84	5.22

- **Rate of change in TC and PI due to the indoor unit at standard temperature condition.**

Model		Correction factor	
		TC	PI
ABMW85GB9A0 [UU85 N94]	Max.	1.10	1.21
	Rated	1.00	1.00

■ 3Ø Synchro Equlvalent capacity table

Max Power Input of each model is tabulated below

(Duo)

Model	UT42 NM2 * 2	UM42 N24 * 2	UV42 NL2 * 2
PI	8.73	8.73	8.73

(Trio)

Model	CT24 NP2 * 3	CM24 N14 * 3	CB24L N32 * 3	CV24 NJ2 * 3
PI	8.29	8.29	8.29	8.29

(Quartet)

Model	CT18 NQ2 * 4	CM18 N14 * 4	CB18L N22 * 4	CV18 NJ2 * 4
PI	7.86	7.86	7.86	7.86

Note

1. DB : Dry bulb temperature(℃), WB : Wet bulb temperature(℃)
2. TC : Total capacity(kW), SHC : Sensible Heating Capacity(kW)
3. PI : Power Input (kW, Compressor + indoor fan motor + outdoor fan motor)
4. All capacities are net. A deduction (cooling mode) or an addition (heating mode) of Capacity due to operating heat of indoor unit motor is reflected.
5. For Synchro model operating simultaneously with combinations, The individual capacities of indoor unit are not gived because they are same with the Single model capacities.
6. Direct interpolation is permissible. Do not extrapolate.
7. Rated capacities and power inputs are based on standard temperature and piping conditions, and it can be found on specifications table. Except for rated value, the performance is not guaranteed.
8. In accordance with the test standard(or nations), the rating will vary slightly.

8. Capacity coefficient factor

8.1 Rate of change in capacity due to the main piping length

◆ DC Inverter SINGLE A (1Ø)

■ Rate of change in cooling capacity

Piping length(m)		5	10	15	20	30	40	50	60	70	75
Rate of change in capacity(%)	2.5/3.5kW	100	99.8	99.3	-	-	-	-	-	-	-
	5.0 kW	100	99.8	99.3	98.8	97.8	-	-	-	-	-
	7.1/8.0/10.0 kW	100	99.3	97.9	96.6	93.8	91.1	88.4	-	-	-
	12.5/14.0/15.0 kW	100	99.3	97.9	96.6	93.8	91.1	88.4	85.6	82.9	81.5

■ Rate of change in heating capacity

Piping length(m)		5	10	15	20	30	40	50	60	70	75
Rate of change in capacity(%)	2.5/3.5kW	100	99.8	99.4	-	-	-	-	-	-	-
	5.0 kW	100	99.8	99.4	99.0	98.3	-	-	-	-	-
	7.1/8.0/10.0 kW	100	99.7	99.2	98.7	97.7	96.6	95.6	-	-	-
	12.5/14.0/15.0 kW	100	99.7	99.2	98.7	97.7	96.6	95.6	94.6	93.5	93

◆ DC Inverter SINGLE A (3Ø)

■ Rate of change in cooling capacity

Piping length(m)		5	10	15	20	30	40	50	60	70	75
Rate of change in capacity(%)	10.0 kW	100	99.3	97.9	96.6	93.8	91.1	88.4	-	-	-
	12.5/14.0/15.0/ 19.0/23.0 kW	100	99.3	97.9	96.6	93.8	91.1	88.4	85.6	82.9	81.5

■ Rate of change in heating capacity

Piping length(m)		5	10	15	20	30	40	50	60	70	75
Rate of change in capacity(%)	10.0 kW	100	99.7	99.2	98.7	97.7	96.6	95.6	-	-	-
	12.5/14.0/15.0/ 19.0/23.0 kW	100	99.7	99.2	98.7	97.7	96.6	95.6	94.6	93.5	93.0

8.2 Calculation of actual system capacity

1. **Outdoor unit standard maximum capacity**
   $Q_{max.}$ [from specification table]
2. **Outdoor unit capacity at Ti, To temperature.**
   $Q_{(Ti,\ To)}$ [from capacity table]
3. **Outdoor unit capacity coefficient factor**
   $F_{(Ti,\ To)} = Q_{(Ti,\ To)} / Q_{(max.)}$
4. **Piping correction factor**
   F_{piping} for piping length [from capacity coefficient factor table]
5. **Indoor Unit actual capacity**
   $Q_{actual} = Q_{max} \times F_{(Ti,\ To)} \times F_{piping}$

9. Operation range

◆ AUUW096D [UU09W ULD], AUUW126D [UU12W ULD]

Cooling

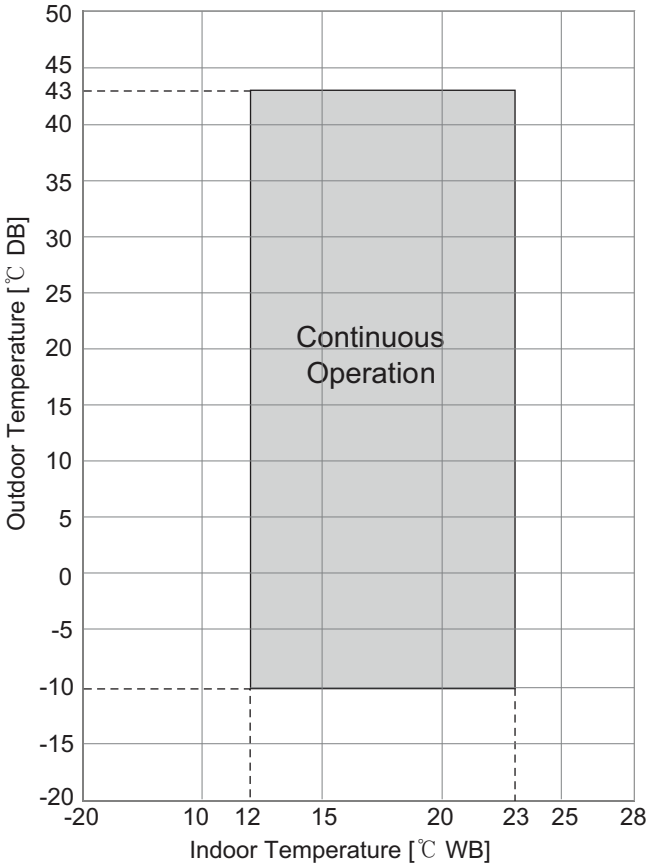

Heating

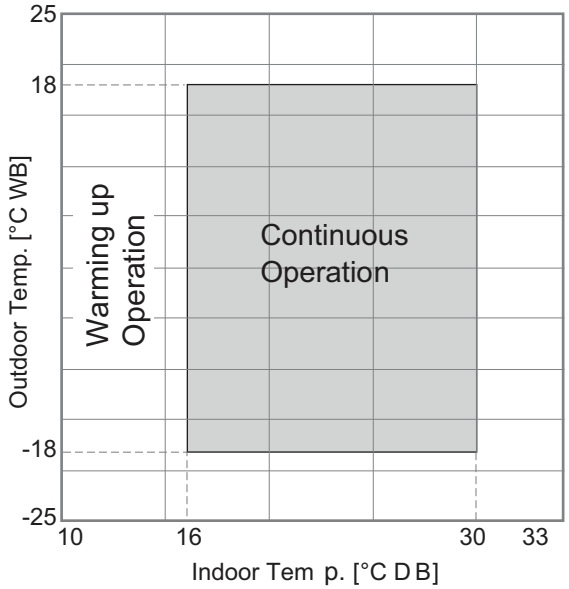

9. Operation range

◆ **AUUW18GAE [UU18W UE4], AUUW24GAE [UU24W U44], AUUW30GAE [UU30W U44] AUUW366D2 [UU36W UO2], AUUW426D2 [UU42W U32], AUUW486D2 [UU48W U32] AUUW606D2 [UU60W U32], AUUW368D2 [UU37W UO2], AUUW428D2 [UU43W U32] AUUW488D2 [UU49W U32], AUUW608D2 [UU61W U32]**

Cooling

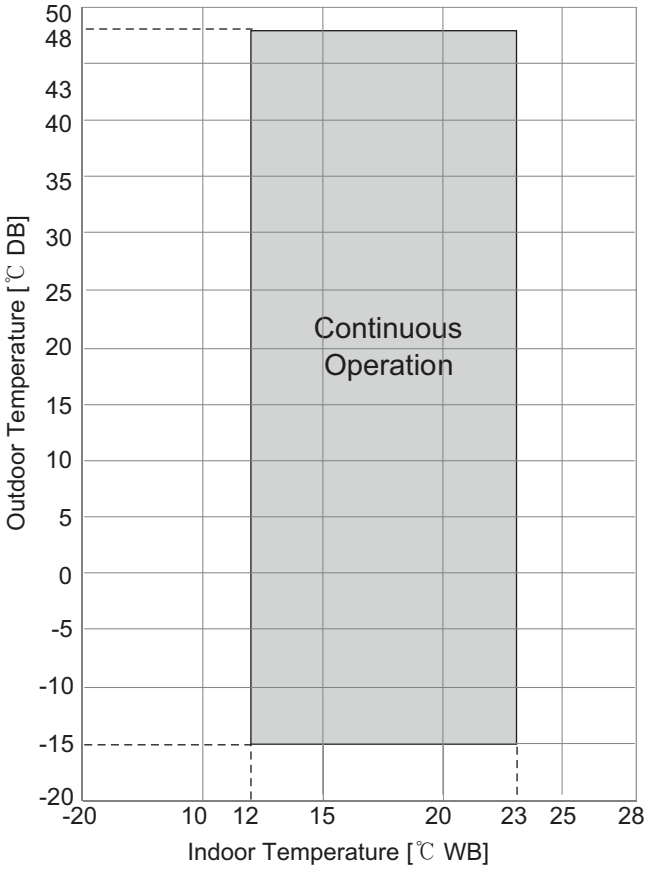

Heating

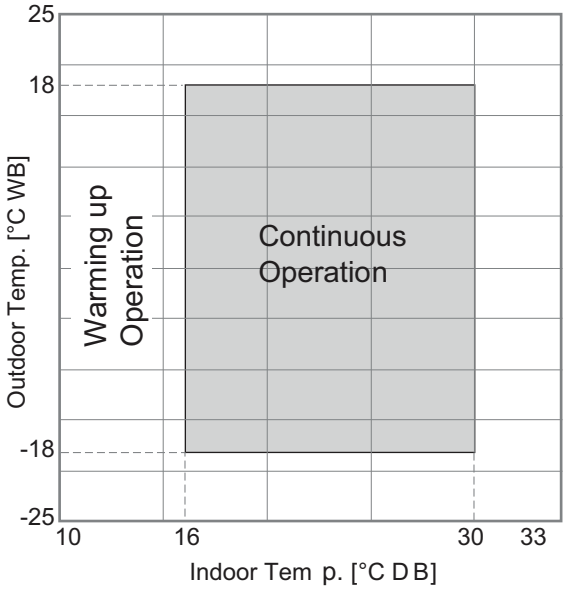

9. Operation range

◆ AUUW70LAE [UU70W U34], AUUW85LAE [UU85W U74]

Cooling

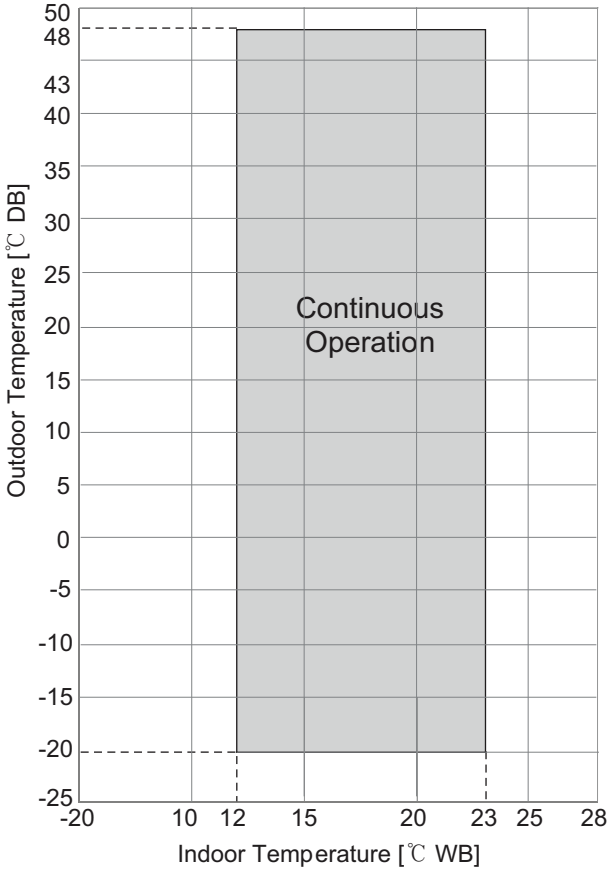

Heating

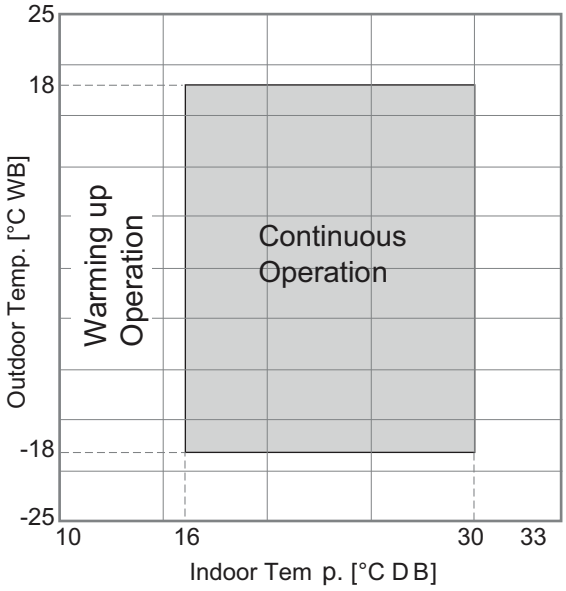

10. Electric characteristics

Outdoor Unit	Combined Indoor Unit		Unit		Power		Comp		OFM		IFM	
Model names	Model Name	No. of Unit	Phase Hz Volts	Voltage range	MCA	MFA	MSC	RLA	kW	FLA	kW	FLA
AUUW096D [UU09W ULD]	ATNH09GRLE2 [CT09 NR2]	1	1 50 220-240	Min. : 198 Max. : 264	4.9	15	-	3.40	0.043	0.25	0.020	0.40
	ABNH09GL1A2 [CB09L N12]				4.9	15	-	3.40	0.043	0.25	0.050	0.40
	AVNH09GELA2 [CV09 NE2]				4.9	15	-	3.40	0.043	0.25	0.030	0.40
	AQNH09GALA0 [CQ09 NA0]				5.1	15	-	3.40	0.043	0.25	0.020	0.60
AUUW126D [UU12W ULD]	ATNH12GRLE2 [CT12 NR2]				6.9	15	-	5.00	0.043	0.25	0.020	0.40
	ABNH12GL2A2 [CB12L N22]				7.3	15	-	5.00	0.043	0.25	0.095	0.80
	AVNH12GELA2 [CV12 NE2]				6.9	15	-	5.00	0.043	0.25	0.040	0.40
	AQNH12GALA0 [CQ12 NA0]				7.1	15	-	5.00	0.043	0.25	0.030	0.60
AUUW18GAE [UU18W UE4]	ATNW18GQLA0 [CT18 NQ4]				16.2	20	-	12.4	0.085	0.33	0.040	0.40
	ABNW18GM1A0 [CM18 N14]				16.2	20	-	12.4	0.085	0.33	0.080	0.40
	ABNH18GL2A2 [CB18 N22]				16.6	20	-	12.4	0.085	0.33	0.120	0.80
	UVNH18GJLA2 [CV18 NJ2]				16.2	20	-	12.4	0.085	0.33	0.050	0.40
	AQNH18GALA0 [CQ18 NA0]				16.5	20	-	12.4	0.085	0.33	0.040	0.70
AUUW24GAE [UU24W U44]	ATNW24GPLA0 [CT24 NP4]				22.3	30	-	17.0	0.124	0.48	0.060	0.60
	ABNW24GM1A0 [CM24 N14]				22.2	30	-	17.0	0.124	0.48	0.090	0.50
	ABNH24GL3A2 [CB24L N32]				22.7	30	-	17.0	0.124	0.48	0.150	1.00
	UVNH24GJLA2 [CV24 NJ2]				22.3	30	-	17.0	0.124	0.48	0.060	0.60
AUUW30GAE [UU30W U44]	ATNW30GPLA0 [UT30 NP4]				22.3	30	-	17.0	0.124	0.48	0.080	0.60
	ABNW30GM1A0 [UM30 N14]				22.5	30	-	17.0	0.124	0.48	0.150	0.80
	UVNH30GJLA2 [UV30 NJ2]				22.3	30	-	17.0	0.124	0.48	0.060	0.60
	AJNW30GVLA0 [UJ30 NV2]				22.3	30	-	17.0	0.124	0.48	0.160	0.60
AUUW366D2 [UU36W UO2]	ATNH36GNLE2 [UT36 NN2]				22.4	40	-	16.93	0.171	0.65	0.140	0.60
	ABNW36GM2A0 [UM36 N24]				23.1	40	-	16.93	0.171	0.65	0.210	1.30
	UVNH36GKLA2 [UV36 NK2]				22.5	40	-	16.93	0.171	0.65	0.090	0.70
	AJNW36GVLA0 [UJ36 NV2]				22.4	40	-	16.93	0.171	0.65	0.160	0.60

Note

1. Voltage supplied to the unit terminals should be within the minimum and maximum range.
2. Maximum allowable voltage unbalance between phase is 2%.
3. MSC means the Max. current during the starting of compressor.
4. MSC and RLA are measured as the compressor only test condition.
5. OFM and IFM are measured as the outdoor unit test condition.
6. Select the wire size based on the MCA.
7. MFA is used to select the circuit breaker and ground fault circuit interrupter, and recommended circuit breaker type is ELCB(Earth Leakage Circuit Breaker).

MCA : Minimum Circuit Amperes (A)
MOP : Maximum rating over current protective device
MSC : Maximum Starting Current
RLA : Rated Load Amperes (A)
OFM : Outdoor Fan Motor
kW : Fan Motor rated output (kW)
FLA : Full Load Amperes (A)

10. Electric characteristics

Outdoor Unit	Combined Indoor Unit		Unit		Power		Comp		OFM		IFM	
Model names	Model Name	No. of Unit	Phase Hz Volts	Voltage range	MCA	MFA	MSC	RLA	kW	FLA	kW	FLA
AUUW426D2 [UU42W U32]	ATNH42GMLE2 [UT42 NM2]	1	1 50 220-240	Min. : 198 Max. : 264	24.6	40	-	18.08	0.248	0.95	0.210	1.00
	ABNW42GM2A0 [UM42 N24]				25.1	40	-	18.08	0.248	0.95	0.260	1.50
	UVNH42GLLA2 [UV42 NL2]				24.6	40	-	18.08	0.248	0.95	0.130	1.00
AUUW486D2 [UUW48 U32]	ATNH48GMLE2 [UT48 NM2]				28.8	40	-	21.51	0.248	0.95	0.210	1.00
	ABNW48GM3A0 [UM48 N34]				28.9	40	-	21.51	0.248	0.95	0.180	1.10
	UVNH48GLLA2 [UV48 NL2]				28.9	40	-	21.51	0.248	0.95	0.140	1.10
	APNH48GTLA0 [UP48 NT2]				28.7	40	-	21.51	0.248	0.95	0.150	0.90
AUUW606D2 [UU60W U32]	ATNH60GMLE2 [UT60 NM2]				33.9	40	-	25.57	0.248	0.95	0.210	1.00
	ABNW60GM3A0 [UM60 N34]				34.6	40	-	25.57	0.248	0.95	0.290	1.65
	UVNH60GLLA2 [UV60 NL2]				34.1	40	-	25.57	0.248	0.95	0.150	1.20
AUUW368D2 [UU37W UO2]	ATNH36GNLE2 [UT36 NN2]		3 50 318-415	Min. : 342 Max. : 456	10.9	20	-	7.71	0.171	0.65	0.140	0.60
	ABNW36GM2A0 [UM36 N24]				11.6	20	-	7.71	0.171	0.65	0.210	1.30
	UVNH36GKLA2 [UV36 NK2]				11.0	20	-	7.71	0.171	0.65	0.090	0.70
	AJNW36GVLA0 [UJ36 NV2]				10.9	20	-	7.71	0.171	0.65	0.160	0.60
AUUW428D2 [UU43W U32]	ATNH42GMLE2 [UT42 NM2]				12.5	20	-	8.47	0.248	0.95	0.210	1.00
	ABNW42GM2A0 [UM42 N24]				13.0	20	-	8.47	0.248	0.95	0.260	1.50
	UVNH42GLLA2 [UV42 NL2]				12.5	20	-	8.47	0.248	0.95	0.130	1.00
AUUW488D2 [UU49W U32]	ATNH48GMLE2 [UT48 NM2]				13.4	20	-	9.12	0.248	0.95	0.210	1.00
	ABNW48GM3A0 [UM48 N34]				13.5	20	-	9.12	0.248	0.95	0.180	1.10
	UVNH48GLLA2 [UV48 NL2]				13.5	20	-	9.12	0.248	0.95	0.140	1.10
	APNH48GTLA0 [UP48 NT2]				13.3	20	-	9.12	0.248	0.95	0.150	0.90
AUUW608D2 [UU61W U32]	ATNH60GMLE2 [UT60 NM2]				14.4	20	-	9.97	0.248	0.95	0.210	1.00
	ABNW60GM3A0 [UM60 N34]				15.1	20	-	9.97	0.248	0.95	0.290	1.65
	UVNH60GLLA2 [UV60 NL2]				14.6	20	-	9.97	0.248	0.95	0.150	1.20
AUUW70LAE [UU70W U34]	ABNW70GB9A0 [UB70 N94]				18.3	30	-	11.5	0.248	0.95	-	3.00
AUUW80LAE [UU85W U74]	ABNW85GB9A0 [UB85 N94]				22.8	30	-	13.6	0.850	2.80	-	3.00

Note

1. Voltage supplied to the unit terminals should be within the minimum and maximum range.
2. Maximum allowable voltage unbalance between phase is 2%.
3. MSC means the Max. current during the starting of compressor.
4. MSC and RLA are measured as the compressor only test condition.
5. OFM and IFM are measured as the outdoor unit test condition.
6. Select the wire size based on the MCA.
7. MFA is used to select the circuit breaker and ground fault circuit interrupter, and recommended circuit breaker type is ELCB(Earth Leakage Circuit Breaker).

MCA : Minimum Circuit Amperes (A)
MOP : Maximum rating over current protective device
MSC : Maximum Starting Current
RLA : Rated Load Amperes (A)
OFM : Outdoor Fan Motor
kW : Fan Motor rated output (kW)
FLA : Full Load Amperes (A)

11. Sound levels

11.1 Sound pressure level

◆ Overall

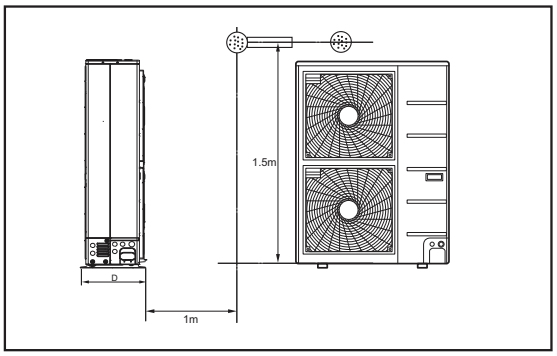

Note

- Sound measured at 1m away from the center of the unit.
- Data is valid at free field condition
- Data is valid at nominal operation condition
- Reference accoustic pressure 0dB = 20μPa
- Sound level will vary depending on a range of factors such as the construction(acoustic absorption coefficient) of particular room in which the equipment is installed.
- The operating conditions are assumed to be standard

Model	220-240V , 50Hz [dB(A)]	
	Cooling	Heating
AUUW096D[UU09W ULD]	47	48
AUUW126D[UU12W ULD]	47	48
AUUW18GAE [UU18W UE4]	47	52
AUUW24GAE [UU24W U44]	48	52
AUUW30GAE [UU30W U44]	48	52
AUUW366D2 [UU36W UO2]	53	54
AUUW426D2 [UU42W U32]	52	54
AUUW486D2 [UU48W U32]	52	54
AUUW606D2 [UU60W U32]	52	54

Model	380-415V , 50Hz [dB(A)]	
	Cooling	Heating
AUUW368D2 [UU37W UO2]	53	54
AUUW428D2 [UU43W U32]	52	54
AUUW488D2 [UU49W U32]	52	54
AUUW608D2 [UU61W U32]	52	54
AUUW70LAE [UU70W U34]	55	58
AUUW85LAE [UU85W U74]	59	60

11. Sound levels

AUUW096D[UU09W ULD]
AUUW126D[UU12W ULD]

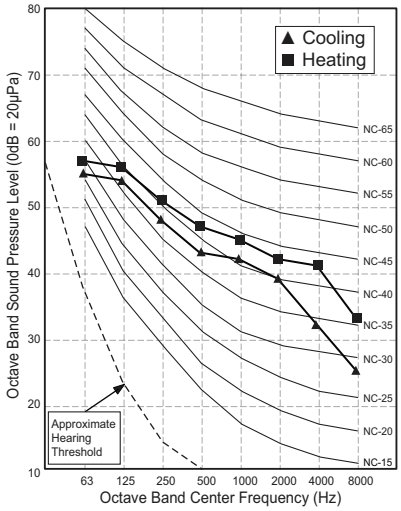

AUUW18GAE [UU18W UE4]

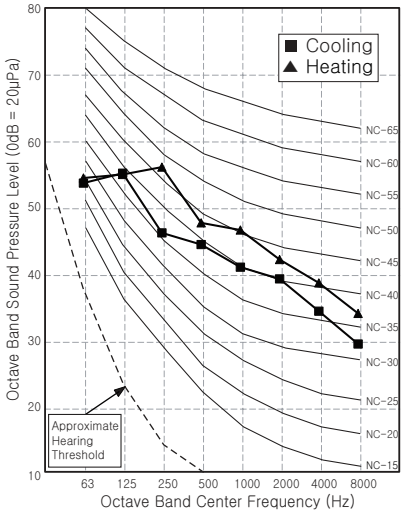

AUUW24GAE [UU24W U44]

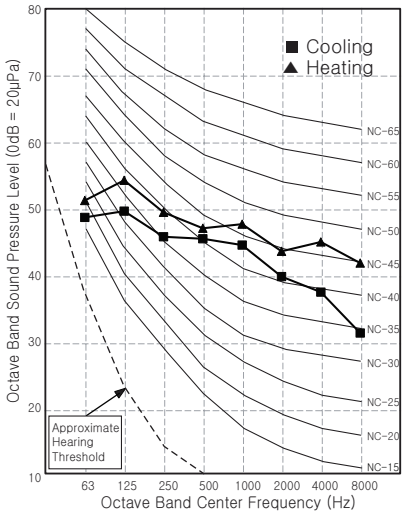

AUUW30GAE [UU30W U44]

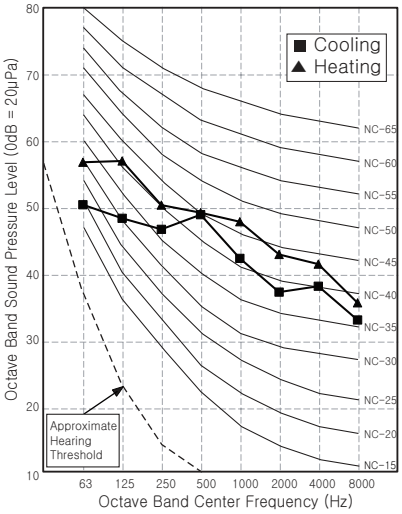

AUUW366D2 [UU36W UO2]
AUUW368D2 [UU37W OU2]

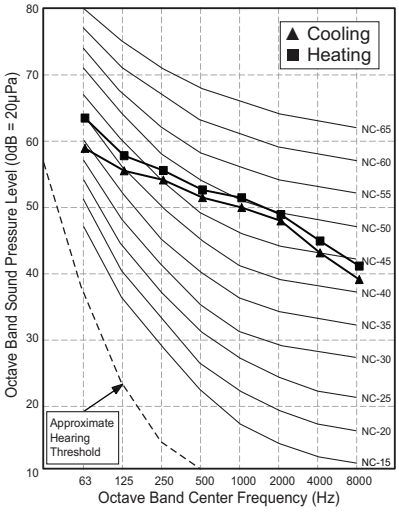

AUUW426D2 [UU42W U32]
AUUW486D2 [UU48W U32]
AUUW606D2 [UU60W U32]
AUUW428D2 [UU43W U32]
AUUW488D2 [UU49W U32]
AUUW608D2 [UU61W U32]

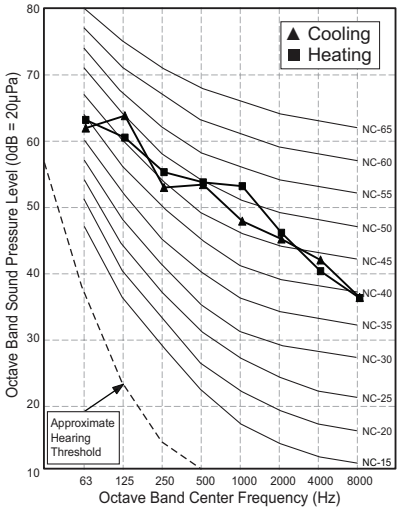

11. Sound levels

AUUW70LAE [UU70W U34]

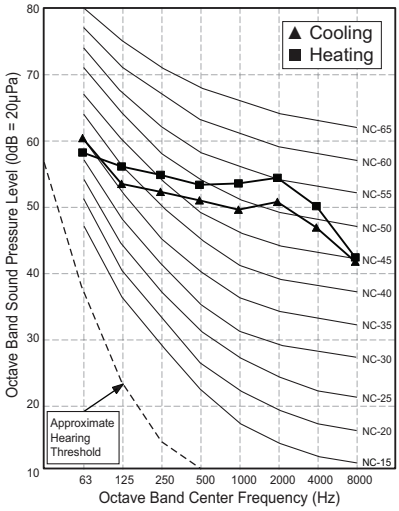

AUUW85LAE [UU85W U74]

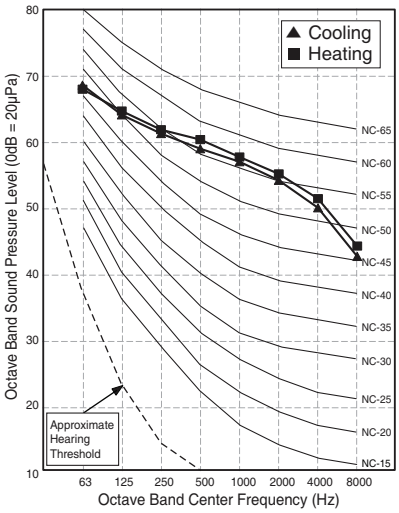

11. Sound levels

11.2 Sound power level

Note

1. Reference acoustic intensity 0dB = 10E-6μW/m^2
2. Sound level will vary depending on a range of factors such as the construction (acoustic absorption coefficient) of particular room in which the equipment in installed.

Model	Sound power level [dB(A)]
	H
AUUW096D [UU09W ULD]	56
AUUW126D [UU12W ULD]	57
AUUW18GAE [UU18W UE4]	63
AUUW24GAE [UU24W U44]	67
AUUW30GAE [UU30W U44]	68
AUUW366D2 [UU36W UO2]	66
AUUW426D2 [UU42W U32]	67

Model	Sound power level [dB(A)]
	H
AUUW486D2 [UU48W U32]	68
AUUW606D2 [UU60W U32]	71
AUUW368D2 [UU37W UO2]	66
AUUW428D2 [UU43W U32]	67
AUUW488D2 [UU49W U32]	68
AUUW608D2 [UU61W U32]	71
AUUW70LAE [UU70W U34]	73
AUUW85LAE [UU85W U74]	74

AUUW096D [UU09W ULD]

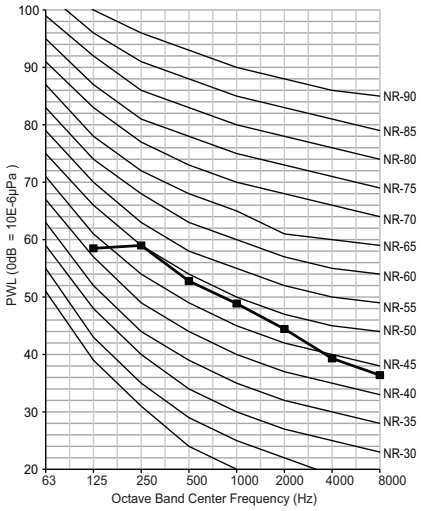

AUUW126D [UU12W ULD]

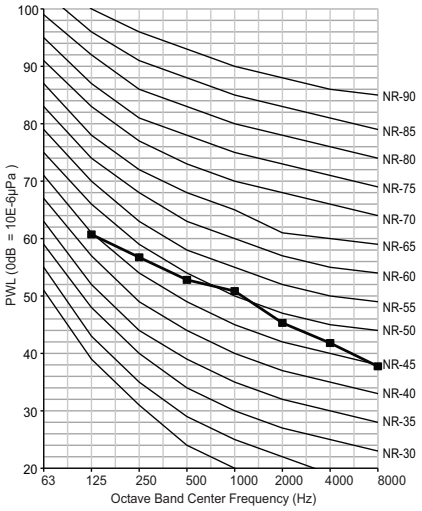

AUUW18GAE [UU18W UE4]

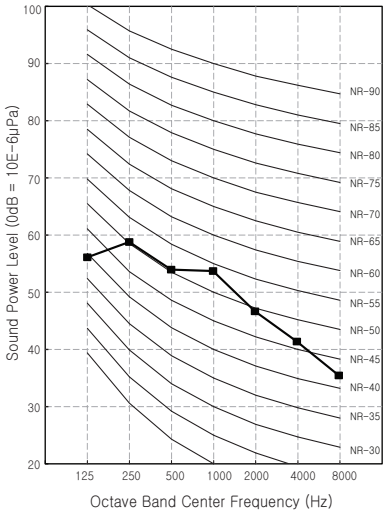

11. Sound levels

AUUW24GAE [UU24W U44]

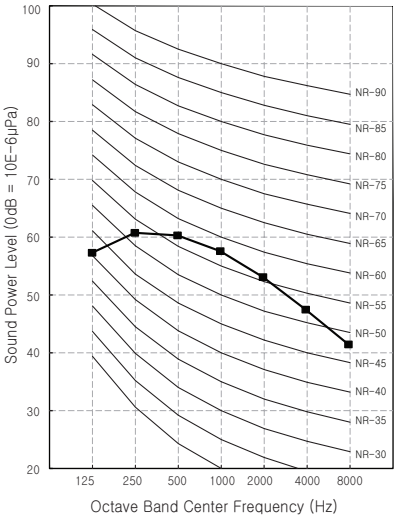

AUUW30GAE [UU30W U44]

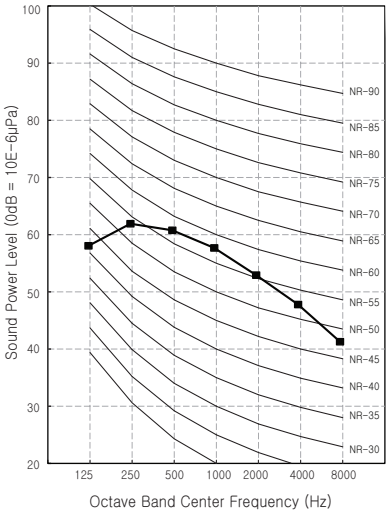

AUUW366D2 [UU36W UO2]
AUUW368D2 [UU37W UO2]

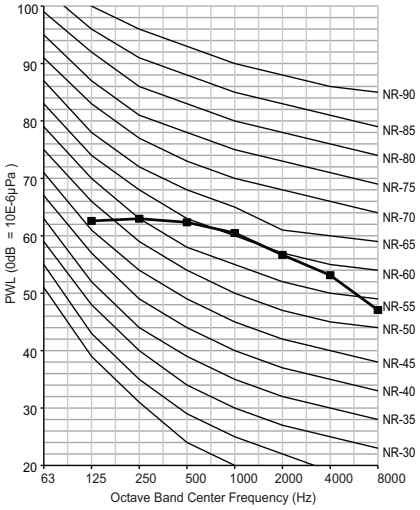

AUUW426D2 [UU42W U32]
AUUW428D2 [UU43W U32]

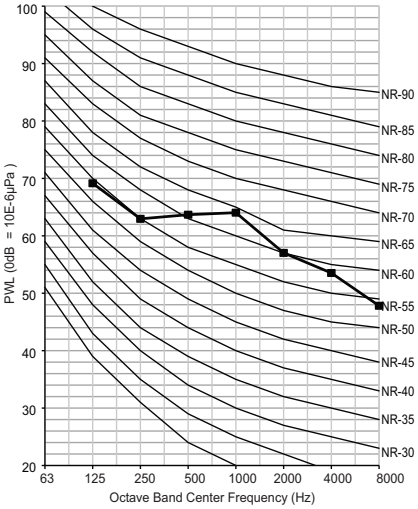

AUUW486D2 [UU48W U32]
AUUW488D2 [UU49W U32]

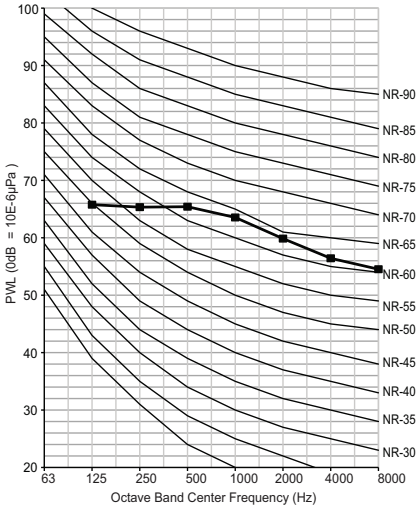

AUUW606D2 [UU60W U32]
AUUW608D2 [UU61W U32]

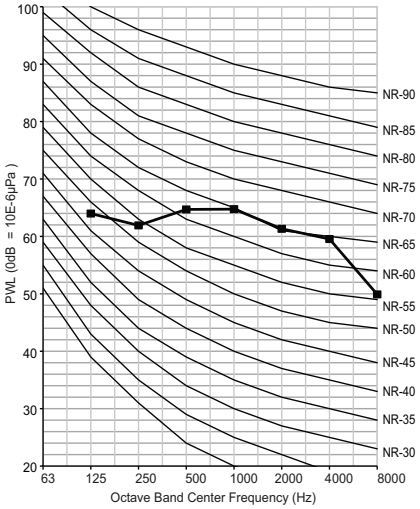

AUUW70LAE [UU70W U34]

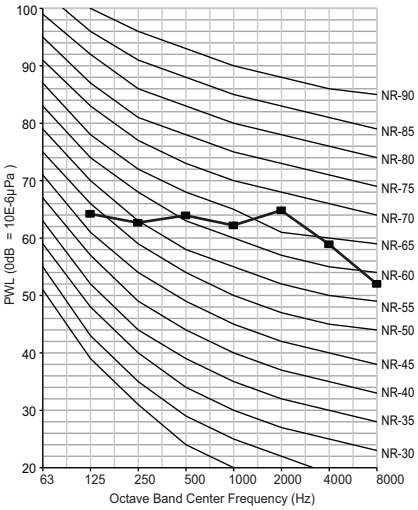

AUUW85LAE [UU85W U74]

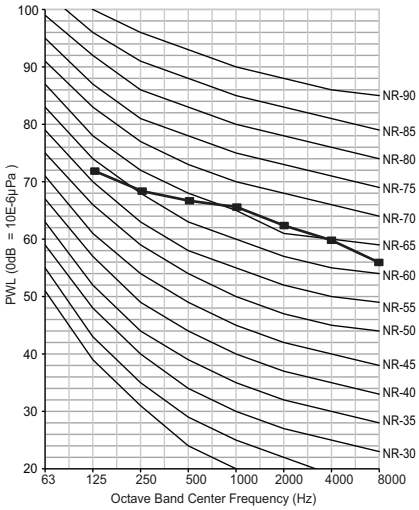

SINGLE A™

Outdoor Unit

DC Inverter SINGLE A - Synchro (1Ø, 3Ø)

1. Power supply
2. List of functions
3. Combination table
4. Piping Length & Height
5. Outdoor Unit PCB Setting Procedure For Simultaneous Operation System
6. Piping diagrams
7. Accessories

1. Power supply

Type	Outdoorunit	Capacity(kW)	Circuit breakercapacity	Powersupply
1 Phase Inveter	AUUW426D2 [UU42W U32]	12.5	40A	1Ø, 220-240 V, 50Hz
	AUUW486D2 [UU48W U32]	14.0		
	AUUW606D2 [UU60W U32]	15.0		
3 Phase Inverter	AUUW428D2 [UU43W U32]	12.5	20A	3Ø, 380-415 V, 50Hz
	AUUW488D2 [UU49W U32]	14.0		
	AUUW608D2 [UU61W U32]	15.0		
	AUUW70LAE [UU70W U34]	19.0	30A	
	AUUW85LAE [UU85 U74]	23.0		

◆ External wiring procedure

- The power supply work is needed only to the outdoor unit. The power supply to the indoor unit is conducted through the transmission wiring. Therefore, the power supply work can be carried out at just one place of the outdoor unit. It will contribute to simplify the work procedure and to save cost.
- Wiring cable size must comply with the applicable local and national code.

(Ex. Duo simultaneous operation)

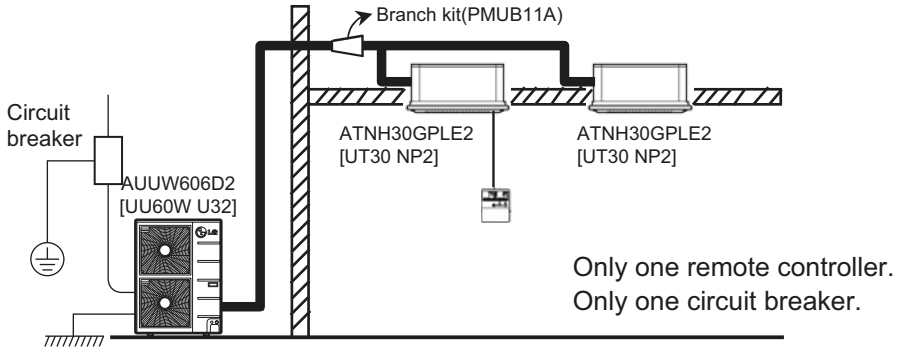

(Ex. Trio simultaneous operation)

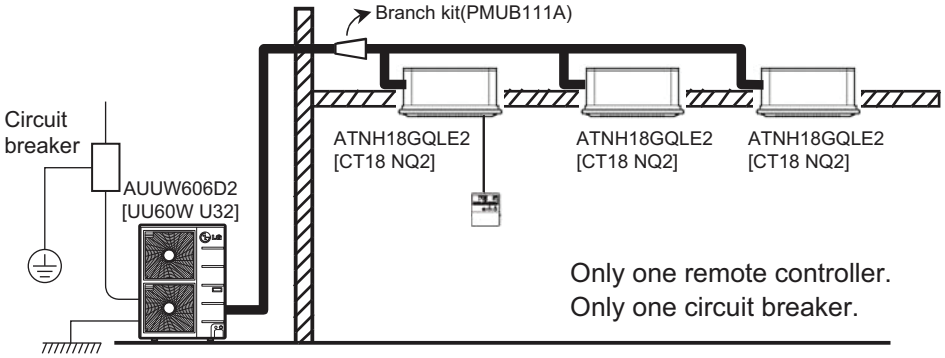

(Ex. Quartets imultaneous operation)

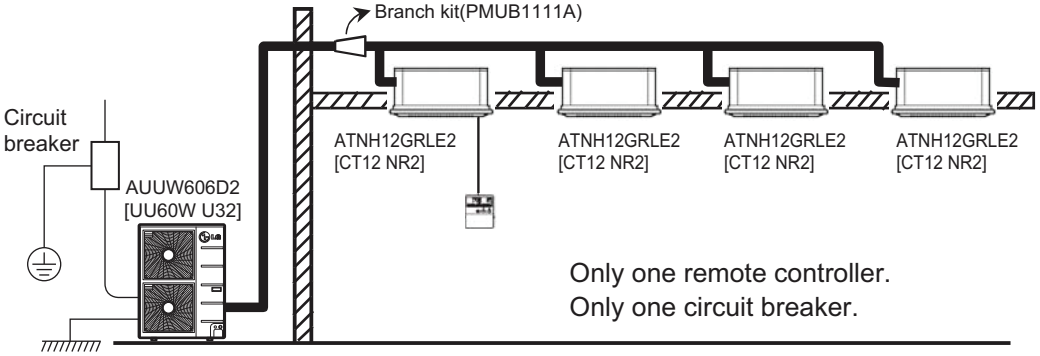

2. List of functions

◆ DC Inverter Synchro (1Ø)

Category	Functions	AUUW426D2 [UU42W U32]	AUUW486D2 [UU48W U32]	AUUW606D2 [UU60W U32]
Reliability	Defrost / Deicing	O	O	O
	High pressure switch	X	X	X
	Low pressure switch	X	X	X
	Phase protection	X	X	X
	Restart delay (3-minutes)	O	O	O
	Self diagnosis	O	O	O
	Soft start	O	O	O
Convenience	Test function	O	O	O
	Night Silent Operation	O	O	O
	Peak Control	X	X	X
	Mode Lock	X	X	X
	Forced Cooling Operation (Outdoor Unit)	O	O	O
Network function	Network solution(LGAP)	O	O	O
ODU Dry Contact		X	X	X

Device		AUUW426D2[[UU42W U32]	AUUW486D2 [UU48W U32]	AUUW606D2 [UU60W U32]
Central Controller	AC Ez (Simple Controller)	PQCSZ250S0	PQCSZ250S0	PQCSZ250S0
	AC Ez Touch	PACEZA000	PACEZA000	PACEZA000
	AC Smart IV	X	X	X
	ACP IV	X	X	X
	AC Manager IV	X	X	X
	PI485	PMNFP14A0/ PMNFP14A1	PMNFP14A0/ PMNFP14A1	PMNFP14A0/ PMNFP14A1
Installation	Y branch	Accessory	Accessory	Accessory
	Header branch	Accessory	Accessory	Accessory
BNU (Building Network Unit)	LONWORKS Gateway	X	X	X
	BACnet Gateway	X	X	X
Low Ambient Kit		O (Logical operation*)	O (Logical operation*)	O (Logical operation*)

Note

1. O : Applied X : Not applied
   Accessory model name : Installed at field, ordered and purchased separately by the corresponding model name, supplied with separate package.

- * : If outdoor side air temperature is low on cooling mode, outdoor unit controls the fan speed for continuous operation without the installation of additional accessory.

2. List of functions

◆ DC Inverter Synchro (3Ø)

Category	Functions	AUUW428D2 [UU43W U32]	AUUW488D2 [UU49W U32]
Reliability	Defrost / Deicing	O	O
	High pressure switch	X	X
	Low pressure switch	X	X
	Phase protection	O	O
	Restart delay (3-minutes)	O	O
	Self diagnosis	O	O
	Soft start	O	O
Convenience	Test function	O	O
	Night Silent Operation	O	O
	Peak Control	X	X
	Mode Lock	X	X
	Forced Cooling Operation (Outdoor Unit)	O	O
Network function	Network solution(LGAP)	O	O
ODU Dry Contact		X	X

Device		AUUW428D2 [UU43W U32]	AUUW488D2 [UU49W U32]
Central Con-troller	AC Ez (Simple Controller)	PQCSZ250S0	PQCSZ250S0
	AC Ez Touch	PACEZA000	PACEZA000
	AC Smart IV	X	X
	ACP IV	X	X
	AC Manager IV	X	X
	PI485	PMNFP14A0/ PMNFP14A1	PMNFP14A0/ PMNFP14A1
Installation	Y branch	Accessory	Accessory
	Header branch	Accessory	Accessory
BNU (Building Network Unit)	LONWORKS Gateway	X	X
	BACnet Gateway	X	X
Low Ambient Kit		O (Logical operation*)	O (Logical operation*)

Note

1. O : Applied X : Not applied
   Accessory model name : Installed at field, ordered and purchased separately by the corresponding model name, supplied with separate package.

- * : If outdoor side air temperature is low on cooling mode, outdoor unit controls the fan speed for continuous operation without the installation of additional accessory.

2. List of functions

Category	Functions	AUUW608D2 [UU61W U32]	AUUW70LAE [UU70W U34]	AUUW85LAE [UU85W U74]
Reliability	Defrost / Deicing	O	O	O
	High pressure switch	X	X	X
	Low pressure switch	X	X	X
	Phase protection	O	O	O
	Restart delay (3-minutes)	O	O	O
	Self diagnosis	O	O	O
	Soft start	O	O	O
Convenience	Test function	O	O	O
	Night Silent Operation	O	O	O
	Peak Control	X	O	O
	Mode Lock	X	O	O
	Forced Cooling Operation (Outdoor Unit)	O	O	O
Network function	Network solution(LGAP)	O	O	O
ODU Dry Contact		X	X	X

Device		AUUW608D2 [UU61W U32]	AUUW70LAE [UU70W U34]	AUUW85LAE [UU85W U74]
Central Controller	AC Ez (Simple Controller)	PQCSZ250S0	PQCSZ250S0	PQCSZ250S0
	AC Ez Touch	PACEZA000	PACEZA000	PACEZA000
	AC Smart IV	X	X	X
	ACP IV	X	X	X
	AC Manager IV	X	X	X
	PI485	PMNFP14A0/ PMNFP14A1	PMNFP14A0/ PMNFP14A1	PMNFP14A0/ PMNFP14A1
Installation	Y branch	Accessory	Accessory	Accessory
	Header branch	Accessory	Accessory	Accessory
BNU (Building Network Unit)	LONWORKS Gateway	X	X	X
	BACnet Gateway	X	X	X
Low Ambient Kit		O (Logical operation*)	O (Logical operation*)	O (Logical operation*)

Note

1. O : Applied X : Not applied
   Accessory model name : Installed at field, ordered and purchased separately by the corresponding model name, supplied with separate package.

- * : If outdoor side air temperature is low on cooling mode, outdoor unit controls the fan speed for continuous operation without the installation of additional accessory.

3. Combination table

◆ Possible combinations

	Possible combination of indoor units								
	Synchro								
	Duo			Trio			Quartet		
IDU : INDOOR UNIT ODU : OUTDOOR UNIT BD : BRANACH DISTRIBUTOR UNIT REMO : WIRED REMOTE CONTROLLER	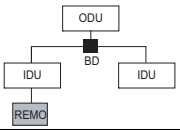			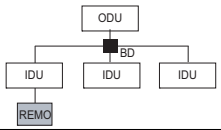			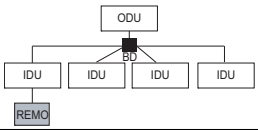		
MODEL	Cas- sette	Duct	Ceiling Suspended	Cas- sette	Duct	Ceiling Suspended	Cas- sette	Duct	Ceiling Suspended
UU42W/UU43W	CT24 NP2*2	CM24 N14*2 CB24L N32*2	CV24 NJ2*2	CT18 NQ2*3	CM18 N14*3 CB18L N22*3	CV18 NJ2*3	CT12 NR2*4	CB12L N22*4	-
UU48W/UU49W	CT24 NP2*2	CM24 N14*2 CB24L N32*2	CV24 NJ2*2	CT18 NQ2*3	CM18 N14*3 CB18L N22*3	CV18 NJ2*3	CT12 NR2*4	CB12L N22*4	-
UU60W/UU61W	UT30 NP2*2	UM30 N14*2	UV30 NJ2*2	CT18 NQ2*3	CM18 N14*3 CB18L N22*3	CV18 NJ2*3	CT12 NR2*4	CB12L N22*4	-
UU70W	UT36 NN2*2	UM36 N24*2	UV36 NK2*2	CT24 NP2*3	CM24 N14*3 CB24L N32*3	CV24 NJ2*3	CT18 NQ2*4	CM18 N14*4 CB18L N22*4	CV18 NJ2*4
UU85W	UT42 NM2*2	UM42 N24*2	UV42 NL2*2	CT24 NP2*3	CM24 N14*3 CB24L N32*3	CV24 NJ2*3	CT18 NQ2*4	CM18 N14*4 CB18L N22*4	CV18 NJ2*4
Branch Kit	PMUB11A			PMUB111A			PMUB1111A		

Note

1. Possible indoor units: Single CAC indoor unit series
   - Dry contact & Zone control & Auto changeover is not available which is connected with synchro.
   - When using synchro operation
     - Do not use wireless remote controller
     - Use only one wired remote controller in the indoor units.
     - Some Central controllers and some functions of central controller can not be available with synchro operation.
2. Branch kits are required for operating Synchro models.

4. Piping Length & Height

◆ Synchro Operation

Install the branch pipe so that pipe length and difference between high and low will not exceed below Spec.

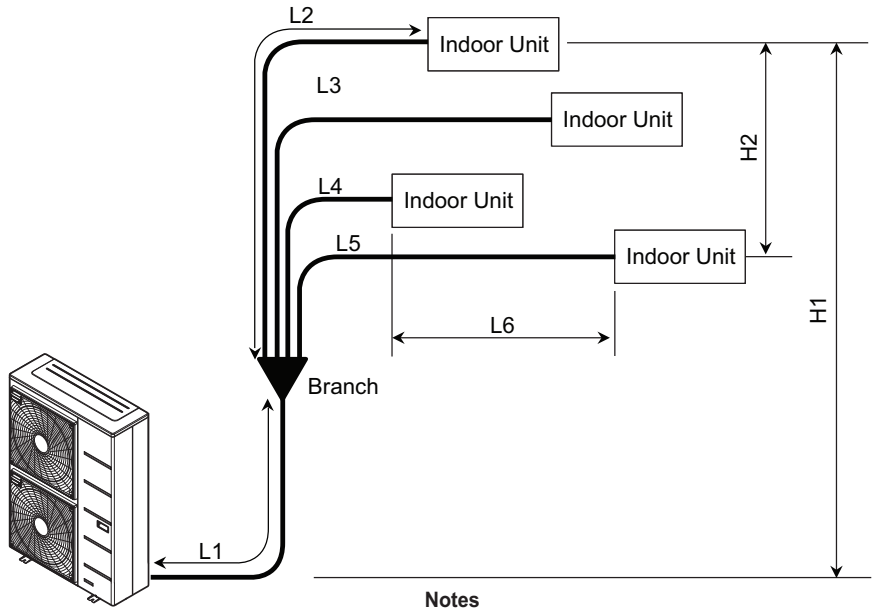

Notes

L1 (m) : Main Piping Length (Outdoor Unit ~ Branching Kit)
L2~L5 (m) : Branch Piping Length (Branching Kit ~ Indoor Unit)
L6 (m) : Length Difference (the Nearest Indoor Unit ~ the farthest Indoor Unit)
H1 (m) : Height Difference (Outdoor Unit ~ Indoor Unit)
H2 (m) : Height Difference (Indoor Unit ~ Indoor Unit)

❊ Refer to the specifications of Outdoor Unit for Maximum limit.

[Unit : m]

Pipe Length & Height	Spec(MAX.)
Total(L1+L2+L3+L4+L5)	80
Main Pipe(L1)	45
Branch Pipe (L2+L3+L4+L5)	40
Each	15
Indoor-Outdoor (H1)	30
Indoor-Indoor (H2)	1
L6	10

- When installing the branch pipe, direction and angle of installation is not limited.
- Take care so that burrs and foreign material may not enter into the cutting surface when connecting.
- Connect remaining those by cutting or direct insertion to the diameter of pipe.

5. Outdoor Unit PCB Setting Procedure For Simultaneous Operation System

◆ 12.5~15.0kW

1. SW01N (PIP SW2) Setting
   Set the SW01N (PIP SW2) as below Table (ⓐ)
2. Auto Addressing Method
   Addressing work assigns address to each indoor unit. When firstly installing product or replacing the indoor unit PCB.
   Auto Addressing work should be done for simultaneous operation.

- Work procedure
  1. Set SW01N (PIP SW2) correctly.
  2. Turn on main power.
  3. Press the SW02N (SW01B) for about 3 seconds within 3 minutes After main power on.(ⓑ)

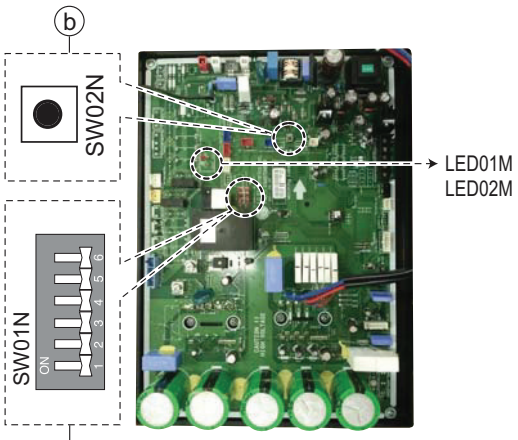

MAIN PCB
UU42W/48W/60W

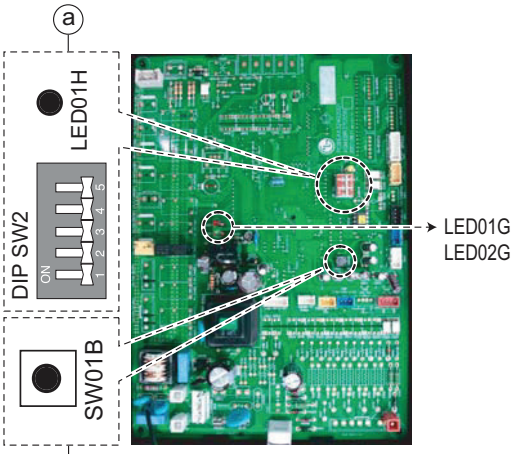

MAIN PCB
UU43W/49W/61W

4. After step 3., the LED01M/G (red LED) and LED02M/G (green LED) rapidly flickers. When Addressing work is done, green LED is off, else LED (LED01M/G) stops flickering and lights continuously. Address of indoor unit is indicated on thewired remote control display window. (CH01, CH02, CH03,CH04)
5. Press button to turn on the indoor.
6. If you fail to perform the Addressing work, repeat step 2.~5.

5. Outdoor Unit PCB Setting Procedure For Simultaneous

■ Table SW01N (PIP SW2) Setting

SW01N (PIP SW2)	Indoor Unit No.
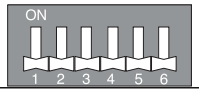	1(Single) : Default
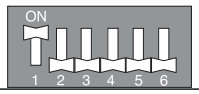	2(Duo)
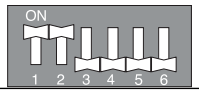	3(Trio)
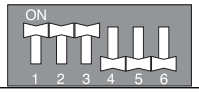	4(Quartet)

◆ 19.0 / 23.0 kW

1. SW01D(DIP S/W) Setting
   Set the SW01D(DIP S/W) as below Table (ⓐ)
2. Auto Addressing Method
   Addressing work assigns address to each indoor unit. When firstly installing product or replacing the indoor unit PCB.
   Auto Addressing work should be done for simultaneous operation.

- Work procedure
  1. Set SW01D(DIP S/W) correctly.
  2. Turn on main power.
  3. Press the SW01A for about 3 seconds within 3 minutes After main power on.(ⓑ)
  4. After step 3., the LED01E (red LED) and LED02E (green LED) rapidly flickers. When Addressing work is done, green LED is off, else LED (LED01E) stops flickering and lights continuously. Address of indoor unit is indicated on the wired remote control display window. (CH01, CH02, CH03,CH04)

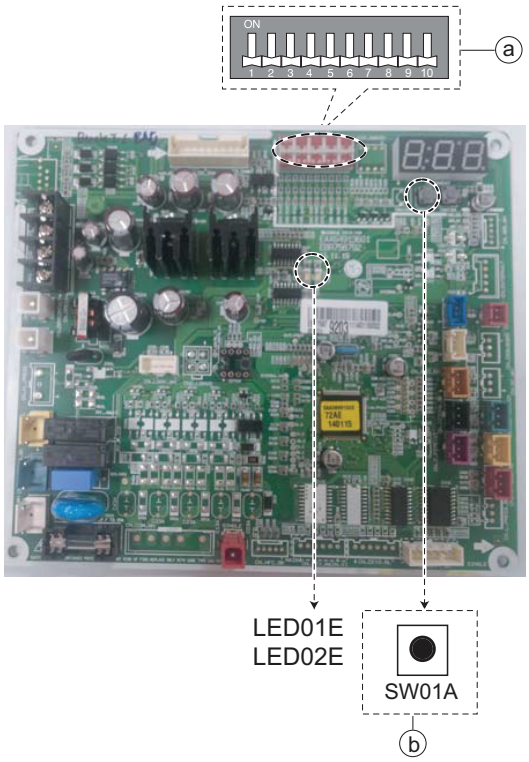

5. Outdoor Unit PCB Setting Procedure For Simultaneous

5. Press button to turn on the indoor.
6. If you fail to perform the Addressing work, repeat step 2.~5.

■ Table SW01D(DIP S/W) Setting

SW01D(DIP S/W)	Indoor Unit No.
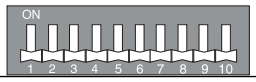	1(Single) : Default
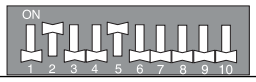	2(Duo)
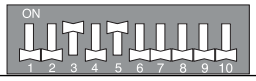	3(Trio)
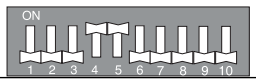	4(Quartet)

6. Piping diagrams

◆ "Synchro" Duo

AUUW426D2 [UU42W U32], AUUW486D2 [UU48W U32], AUUW606D2 [UU60W U32]
AUUW428D2 [UU43W U32], AUUW488D2 [UU49W U32], AUUW608D2 [UU61W U32]
AUUW70LAE [UU70W U34], AUUW85LAE [UU85W U74]

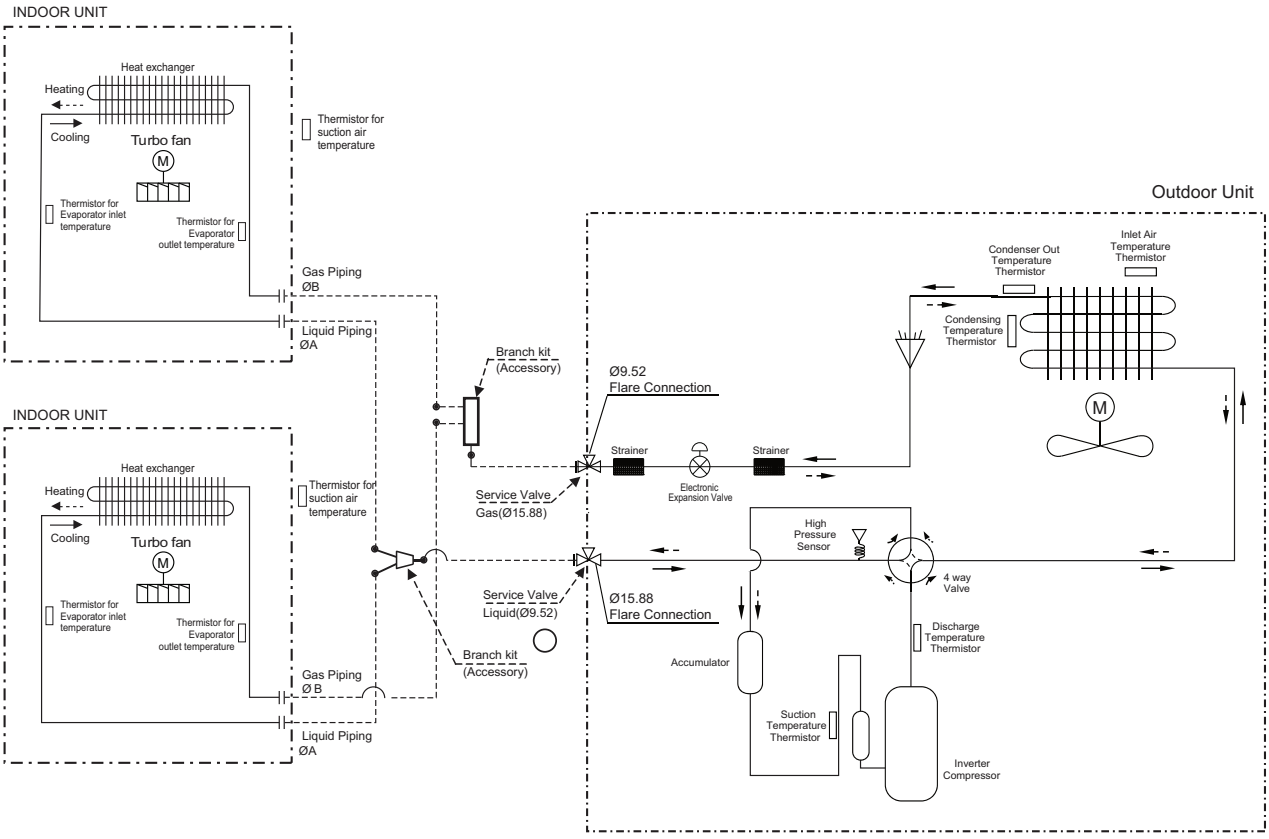

Indoor Unit (kW)	Liquid Pipe, A (mm)	Gas Pipe, B (mm)
7.1	9.52	15.88
8.0		
12		

Refrigerant Flow
Cooling
Heating

Note :
1.The pipes between the indoor units and the branch kits must have same dimensions as indoor unit connections.

6. Piping diagrams

◆ "Synchro" Trio

AUUW426D2 [UU42W U32], AUUW486D2 [UU48W U32], AUUW606D2 [UU60W U32]
AUUW428D2 [UU43W U32], AUUW488D2 [UU49W U32], AUUW608D2 [UU61W U32]
AUUW70LAE [UU70W U34], AUUW85LAE [UU85W U74]

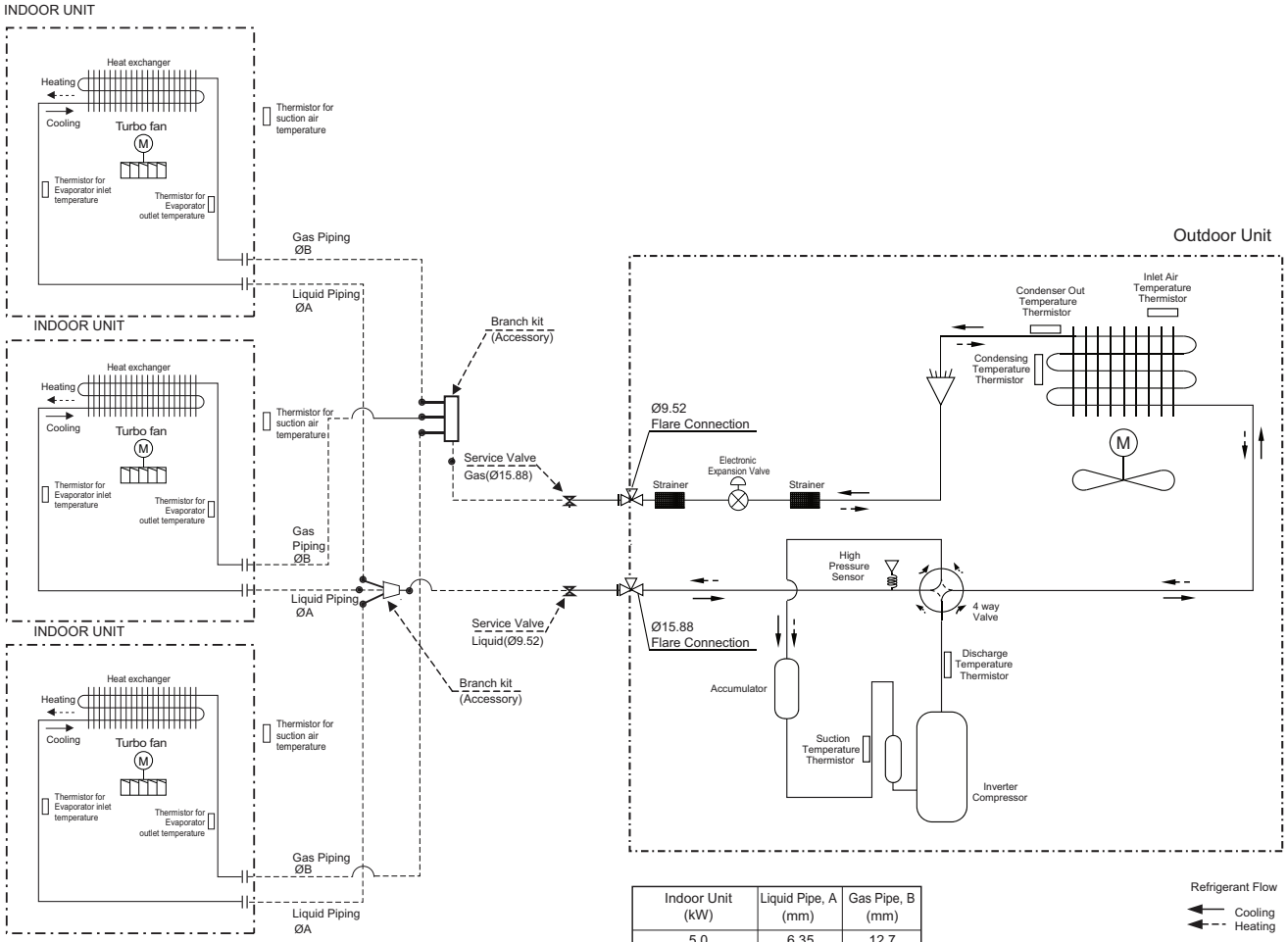

Indoor Unit (kW)	Liquid Pipe, A (mm)	Gas Pipe, B (mm)
5.0	6.35	12.7
8	9.52	15.88

Note :
1.The pipes between the indoor units and the branch kits must have same dimensions as indoor unit connections.

6. Piping diagrams

◆ "Synchro" Quartet

AUUW426D2 [UU42W U32], AUUW486D2 [UU48W U32], AUUW606D2 [UU60W U32]
AUUW428D2 [UU43W U32], AUUW488D2 [UU49W U32], AUUW608D2 [UU61W U32]
AUUW70LAE [UU70W U34], AUUW85LAE [UU85W U74]

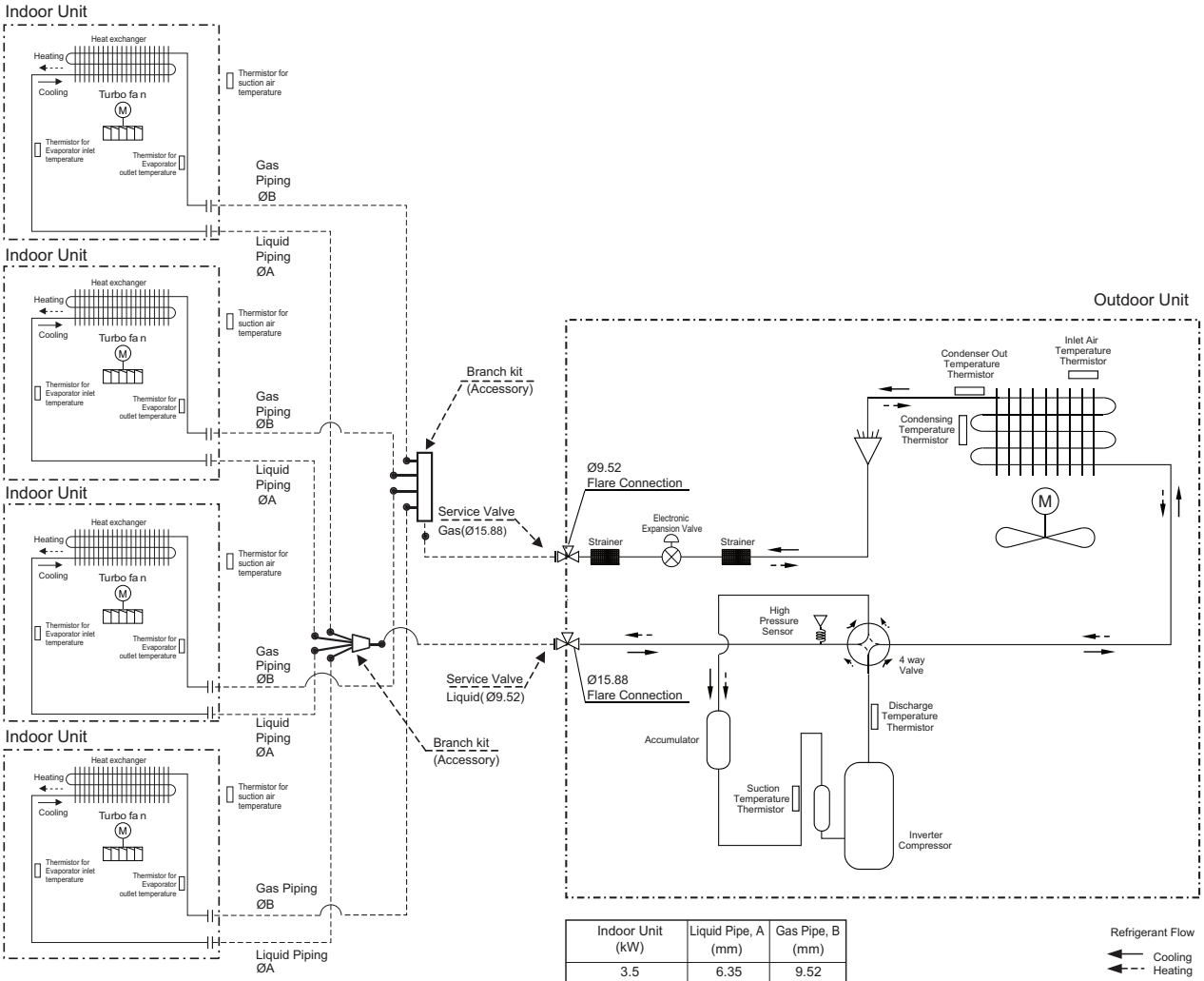

Indoor Unit (kW)	Liquid Pipe, A (mm)	Gas Pipe, B (mm)
3.5	6.35	9.52
5	6.35	12.7

Note :
1.The pipes between the indoor units and the branch kits must have same dimensions as indoor unit connections.

7. Accessories

◆ Optional accessories

Name	ModelNo.	Indoorclassification	CapacityRatio(%)
Branch Kit	PMUB11A	"Synchro" Duo	50:50(1:1)
	PMUB111A	"Synchro" Trio	33:33:33(1:1:1)
	PMUB1111A	"Synchro" Quartet	25:25:25:25(1:1:1:1)

SINGLE A™

Outdoor Unit

Compact Model

DC Inverter SINGLE A (1Ø)

SINGLE A™

Outdoor Unit

DC Inverter SINGLE A (1Ø)

1. List of functions
2. Specifications
3. Dimensions
4. Piping diagrams
5. Wiring diagrams
6. Capacity tables
7. Capacity coefficient factor
8. Operation range
9. Electric characteristics
10. Sound levels

1. List of functions

◆ DC Inverter SINGLE A Compact (1Ø)

Category	Functions	AUUW18GC0 [UU18WC UL0], AUUW24GC0 [UU24WC UE0] AUUW30GC0 [UU30WC UE0], AUUW36GC0 [UU36WC U40]
Reliability	Defrost / Deicing	O
	High pressure switch	X
	Low pressure switch	X
	Phase protection	X
	Restart delay (3-minutes)	O
	Self diagnosis	O
	Soft start	O
Convenience	Test function	O
	Night Silent Operation	O
	Peak Control	X
	Mode Lock	X
	Forced Cooling Operation (Outdoor Unit)	O
Network function	Network solution(LGAP)	O
ODU Dry Contact		X

Device		AUUW18GC0 [UU18WC UL0], AUUW24GC0 [UU24WC UE0] AUUW30GC0 [UU30WC UE0], AUUW36GC0 [UU36WC U40]
Central Controller	AC Ez (Simple Controller)	X
	AC Ez Touch	X
	AC Smart IV	X
	ACP IV	X
	AC Manager IV	X
	PI485	X
BNU (Building Network Unit)	LONWORKS Gateway	X
	BACnet Gateway	X
Low Ambient Kit		O (Logical operation*)

Note

1. O : Applied X : Not applied
   Accessory model name : Installed at field, ordered and purchased separately by the corresponding model name, supplied with separate package.

- * : If outdoor side air temperature is low on cooling mode, outdoor unit controls the fan speed for continuous operation without the installation of additional accessory.

2. Specifications

◆ DC Inverter SINGLE A Compact (1Ø)

Combination	Outdoor unit			AUUW18GC0 [UU18WC UL0]	AUUW24GC0 [UU24WC UE0]
	Indoor unit			ABNW18GBHC0 [UB18C NH0]	ABNW24GBHC0 [UB24C NH0]
Capacity	Cooling	Min.~Rated~Max.	kW	1.80 ~ 4.70 ~ 5.10	2.70 ~ 6.80 ~ 7.40
		Min.~Rated~Max.	Btu/h	6,140 ~ 16,040 ~ 17,410	9,210 ~ 23,210 ~ 25,260
	Heating	Min.~Rated~Max.	kW	1.70 ~ 5.20 ~ 5.70	1.90 ~ 7.50 ~ 8.20
		Min.~Rated~Max.	Btu/h	5,800 ~ 17,750 ~ 19,460	6,480 ~ 25,600 ~ 28,000
Power Input	Cooling	Rated	kW	1.63	2.33
	Heating	Rated	kW	1.67	2.40
Running Current	Cooling	Rated	A	7.30	9.40
	Heating	Rated	A	7.40	9.60
SEER / SCOP			Wh / Wh	5.11 / 3.81	5.38 / 3.81
Seasonal Energy Label	Cooling / Heating		-	A / A	A / A
Annual Energy Consumption	Cooling / Heating		kWh	377 / 1,400	442 / 1,911

Combination	Outdoor unit			AUUW30GC0 [UU30WC UE0]	AUUW36GC0 [UU36WC U40]
	Indoor unit			ABNW30GM1A0 [UM30 N14]	ABNW36GM2A0 [UM36 N24]
Capacity	Cooling	Min.~Rated~Max.	kW	3.20~ 7.50 ~ 7.80	3.80 ~ 9.50 ~ 10.0
		Min.~Rated~Max.	Btu/h	10,900 ~ 25,600 ~ 26,600	13,000 ~ 32,400 ~ 34,100
	Heating	Min.~Rated~Max.	kW	3.60 ~ 8.00 ~ 8.80	4.00 ~ 10.0 ~ 10.50
		Min.~Rated~Max.	Btu/h	12,300 ~ 27,300 ~ 30,000	13,600 ~ 34,100 ~ 35,800
Power Input	Cooling	Rated	kW	2.68	3.35
	Heating	Rated	kW	2.25	2.93
Running Current	Cooling	Rated	A	12.0	14.9
	Heating	Rated	A	10.0	13.0
SEER / SCOP			Wh / Wh	5.60 / 3.90	5.60 / 3.81
Seasonal Energy Label	Cooling / Heating		-	A+ / A	A+ / A
Annual Energy Consumption	Cooling / Heating		kWh	469 / 2,082	594 / 2,388

Note

1. Due to our policy of innovation some specifications may be changed without notification.
2. Wiring cable size must comply with the applicable local and national codes. And “Electric characteristics” chapter should be considered for electrical work and design. Especially the power cable and circuit breaker should be selected in accordance with that.
3. Power factor could vary less than ±1% according to the operating conditions.
4. Sound pressure level is measured on the rated condition in the anechoic rooms by ISO 3745 standard.
   Sound power level is measured on the rated condition in the reverberation rooms by ISO 3741 standard.
   Therefore, these values can be increased owing to ambient conditions during operation.
5. Performances are based on the following conditions :
   - *Cooling : Indoot Ambient Temp. 27°CDB/19°CWB, Outdoor Ambient Temp. 35°CDB/24°CWB
   - *Heating : Indoot Ambient Temp. 20°CDB / 15°CWB, Outdoor Ambient Temp. 7°CDB / 6°CWB
   - Interconnected Pipe is standard length and difference of Elevation (Outdoor ~ Indoor Unit) is Zero.
6. This product contains Fluorinated greenhouse gases.

2. Specifications

◆ DC Inverter SINGLE A Compact (1Ø)

Outdoor unit				AUUW18GC0 [UU18WC UL0]	AUUW24GC0 [UU24WC UE0]
Power Supply			V , Ø , Hz	220-240 / 1 / 50	220-240 / 1 / 50
Starting Current	Cooling	Max.	A	-	-
	Heating	Max.	A	-	-
Wiring Connections	Power Supply Cable (included Earth)		No. x mm^2 (AWG)	5C x 2.5 (12)	5C x 2.5 (12)
Casing Color			-	Warm Gray	Warm Gray
Dimensions		W x H x D	mm	770 x 545 x 288	870 x 655 x 320
		W x H x D	inch	30-5/16 × 21-15/32 × 11-11/32	34-1/4 × 25-25/32 × 12-19/32
Net Weight			kg (lbs)	37.5 (82.6)	44.5 (98.1)
Compressor	Type		-	Twin Rotary	Twin Rotary
	Model		Model x No.	GKT141MAC x 1	GKT176MAC x 1
	Motor type		-	BLDC	BLDC
	Motor Output		W x No.	1,500 x 1	1,500 x 1
Refrigerant	Type		-	R410A	R410A
	Precharged Amount		g (oz)	1,300 (45.8)	1,400 (49.3)
	Chargeless-Pipe Length		m (ft)	7.5 (24.6)	7.5 (24.6)
	Additional Charging Volume		g/m (oz/ft)	20 (0.7)	40 (1.4)
	Control		-	Electronic Expansion Valve	Electronic Expansion Valve
Refrigerant Oil	Type		-	FVC68D	FVC68D
	Charged volume		cc x No.	570 x 1	670 x 1
Heat Exchanger	(Row x Column x Fins per inch) x No.			(2 x 24 x 14) x 1	(2 x 28 x 14) x 1
Fan	Type		-	Axial	Axial
	Air Flow Rate		m^3/min x No.	28×1	50×1
Fan Motor	Type			BLDC	BLDC
	Output		W x No.	43.0 x 1	85.4 x 1
Sound Pressure Level	Cooling	Rated	dB(A)	47	48
	Heating	Rated	dB(A)	49	50
Sound Power Level	Cooling	Max.	dB(A)	65	68
Piping Connections	Liquid	Outer Dia.	mm(inch)	Ø 6.35 (1/4)	Ø 9.52 (3/8)
	Gas	Outer Dia.	mm(inch)	Ø 12.7 (1/2)	Ø 15.88 (5/8)
Piping Length		Max.	m (ft)	30 (98.4)	30 (98.4)
Maximum Height Difference	Outdoor Unit ~ Indoor Unit	Max.	m (ft)	30 (98.4)	30 (98.4)
Operation Range (Outdoor Temperature)	Cooling	Min. ~ Max.	℃ DB (˚F DB)	-10 (14) ~ 48 (118.4)	-10 (14) ~ 48 (118.4)
	Heating	Min. ~ Max.	℃ WB (˚F WB)	-10 (14) ~ 18 (64.4)	-15 (5) ~ 18 (64.4)

Note

1. Due to our policy of innovation some specifications may be changed without notification.
2. Wiring cable size must comply with the applicable local and national codes. And “Electric characteristics” chapter should be considered for electrical work and design. Especially the power cable and circuit breaker should be selected in accordance with that.
3. Power factor could vary less than ±1% according to the operating conditions.
4. Sound pressure level is measured on the rated condition in the anechoic rooms by ISO 3745 standard.
   Sound power level is measured on the rated condition in the reverberation rooms by ISO 3741 standard.
   Therefore, these values can be increased owing to ambient conditions during operation.
5. Performances are based on the following conditions :
   - *Cooling : Indoot Ambient Temp. 27°CDB/19°CWB, Outdoor Ambient Temp. 35°CDB/24°CWB
   - *Heating : Indoot Ambient Temp. 20°CDB / 15°CWB, Outdoor Ambient Temp. 7°CDB / 6°CWB
   - Interconnected Pipe is standard length and difference of Elevation (Outdoor ~ Indoor Unit) is Zero.
6. This product contains Fluorinated greenhouse gases.

2. Specifications

Outdoor unit				AUUW30GC0 [UU30WC UE0]	AUUW36GC0 [UU36WC U40]
Power Supply			V , Ø , Hz	220-240 / 1 / 50	220-240 / 1 / 50
Starting Current	Cooling	Max.	A	-	-
	Heating	Max.	A	-	-
Wiring Connections	Power Supply Cable (included Earth)		No. x mm^2 (AWG)	3C x 2.5 (14)	3C x 2.5 (14)
Casing Color			-	Warm Gray	Warm Gray
Dimensions		W x H x D	mm	870 × 655 × 320	950 × 834 × 330
		W x H x D	inch	34-1/4 x 25-25/32 x 12-19/32	37-13/32 × 32-27/32 × 13
Net Weight			kg (lbs)	45.4 (100.0)	58.2 (128.3)
Compressor	Type		-	Twin Rotary	Twin Rotary
	Model		Model x No.	GKT208MAB x 1	GJT240MAA x 1
	Motor type		-	BLDC	BLDC
	Motor Output		W x No.	1,500 x 1	2,137 x 1
Refrigerant	Type		-	R410A	R410A
	Precharged Amount		g (oz)	1,600 (56.4)	2,200 (77.6)
	Chargeless-Pipe Length		m (ft)	7.5 (24.6)	7.5 (24.6)
	Additional Charging Volume		g/m (oz/ft)	40 (0.43)	40 (0.43)
	Control		-	Electronic Expansion Valve	Electronic Expansion Valve
Refrigerant Oil	Type		-	FVC68D	FVC68D
	Charged volume		cc x No.	670 x 1	900 x 1
Heat Exchanger	(Row x Column x Fins per inch) x No.			(2 x 28 x 18) x 1	(2 x 38 x 14) x 1
Fan	Type		-	Axial	Axial
	Air Flow Rate		m^3/min x No.	50 x 1	58 x 1
Fan Motor	Type			BLDC	BLDC
	Output		W x No.	85.4 x 1	124.0 x 1
Sound Pressure Level	Cooling	Rated	dB(A)	51	54
	Heating	Rated	dB(A)	52	56
Sound Power Level	Cooling	Max.	dB(A)	70	70
Piping Connections	Liquid	Outer Dia.	mm(inch)	Ø 9.52 (3/8)	Ø 9.52 (3/8)
	Gas	Outer Dia.	mm(inch)	Ø 15.88 (5/8)	Ø 15.88 (5/8)
Piping Length		Max.	m (ft)	35 (114.8)	40 (131.2)
Maximum Height Difference	Outdoor Unit ~ Indoor Unit	Max.	m (ft)	30 (98.4)	30 (98.4)
Operation Range (Outdoor Temperature)	Cooling	Min. ~ Max.	℃ DB (˚F DB)	-10 (14.0) ~ 48 (118.4)	-10 (14.0) ~ 48 (118.4)
	Heating	Min. ~ Max.	℃ WB (˚F WB)	-10 (14.0) ~ 18 (64.4)	-10 (14.0) ~ 18 (64.4)

Note

1. Due to our policy of innovation some specifications may be changed without notification.
2. Wiring cable size must comply with the applicable local and national codes. And “Electric characteristics” chapter should be considered for electrical work and design. Especially the power cable and circuit breaker should be selected in accordance with that.
3. Power factor could vary less than ±1% according to the operating conditions.
4. Sound pressure level is measured on the rated condition in the anechoic rooms by ISO 3745 standard.
   Sound power level is measured on the rated condition in the reverberation rooms by ISO 3741 standard.
   Therefore, these values can be increased owing to ambient conditions during operation.
5. Performances are based on the following conditions :
   - *Cooling : Indoot Ambient Temp. 27°CDB/19°CWB, Outdoor Ambient Temp. 35°CDB/24°CWB
   - *Heating : Indoot Ambient Temp. 20°CDB / 15°CWB, Outdoor Ambient Temp. 7°CDB / 6°CWB
   - Interconnected Pipe is standard length and difference of Elevation (Outdoor ~ Indoor Unit) is Zero.
6. This product contains Fluorinated greenhouse gases.

3. Dimensions

AUUW18GC0 [UU18WC UL0]

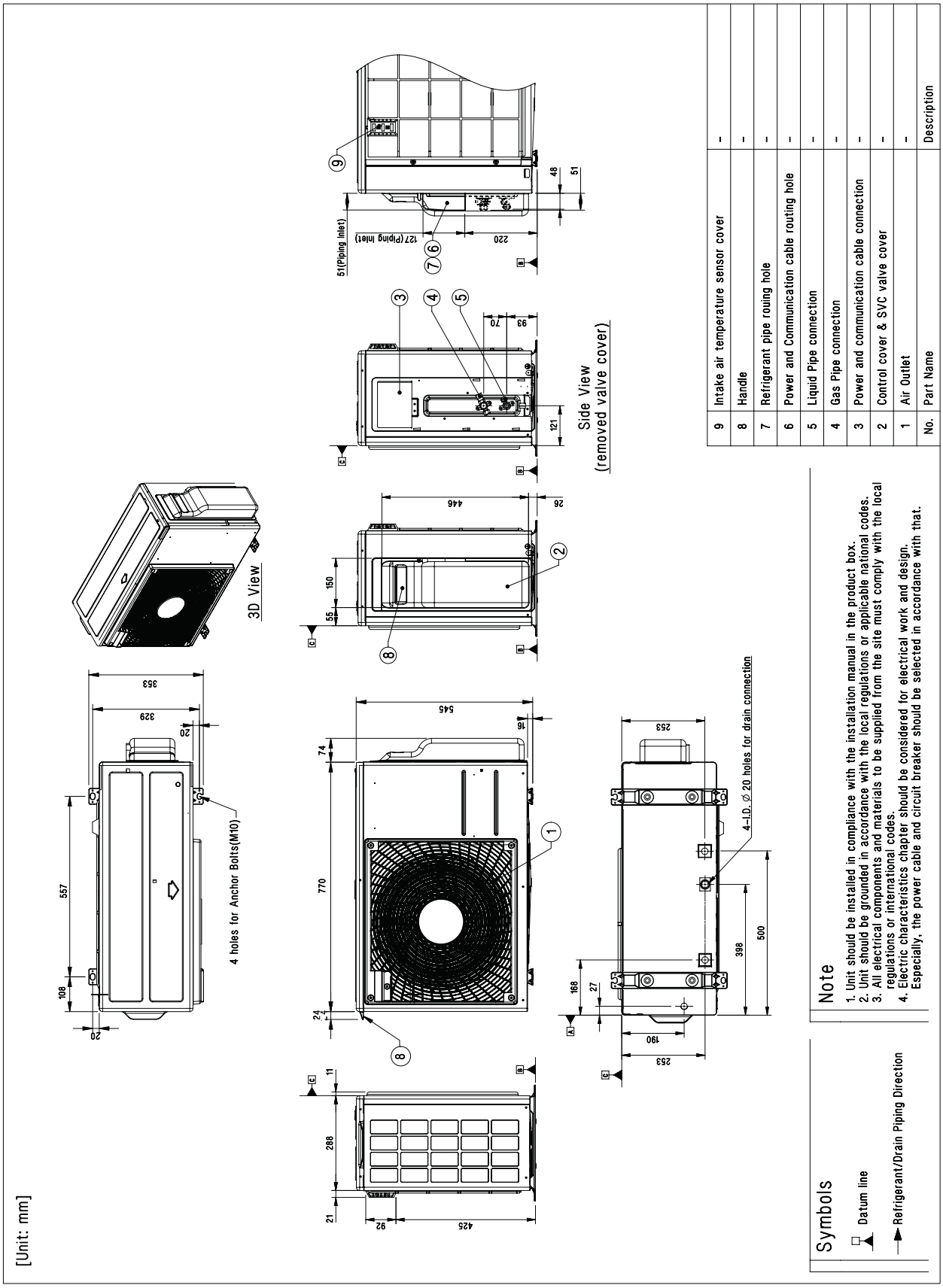

No.	Part Name	Description
9	Intake air temperature sensor cover	-
8	Handle	-
7	Refrigerant pipe rouing hole	-
6	Power and Communication cable routing hole	-
5	Liquid Pipe connection	-
4	Gas Pipe connection	-
3	Power and communication cable connection	-
2	Control cover & SVC valve cover	-
1	Air Outlet	-

3. Dimensions

AUUW24GC0 [UU24WC UE0] / AUUW30GC0 [UU30WC UE0]

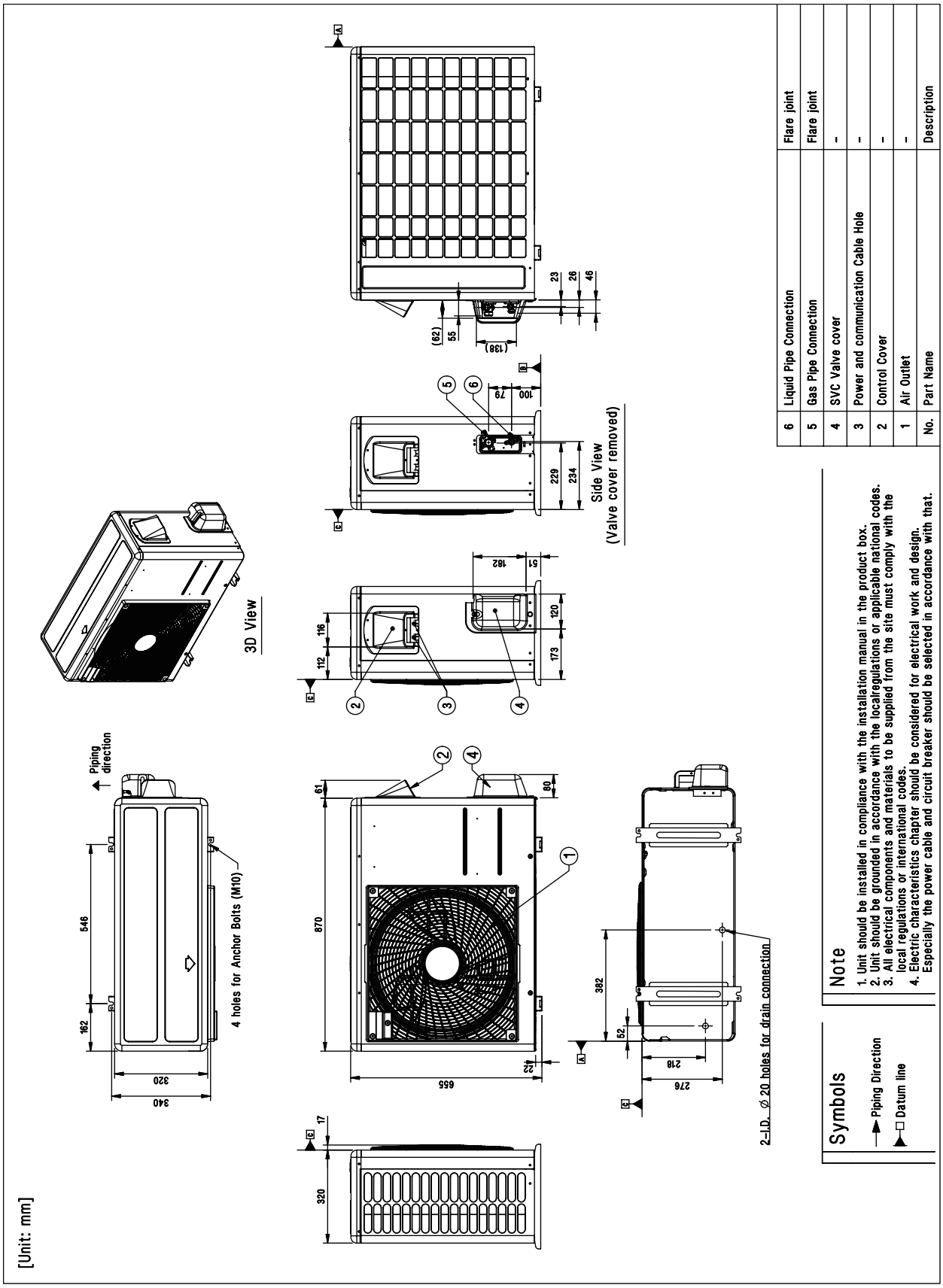

No.	Part Name	Description
6	Liquid Pipe Connection	Flare joint
5	Gas Pipe Connection	Flare joint
4	SVC Valve cover	-
3	Power and communication Cable Hole	-
2	Control Cover	-
1	Air Outlet	-

3. Dimensions

AUUW36GC0 [UU36WC U40]

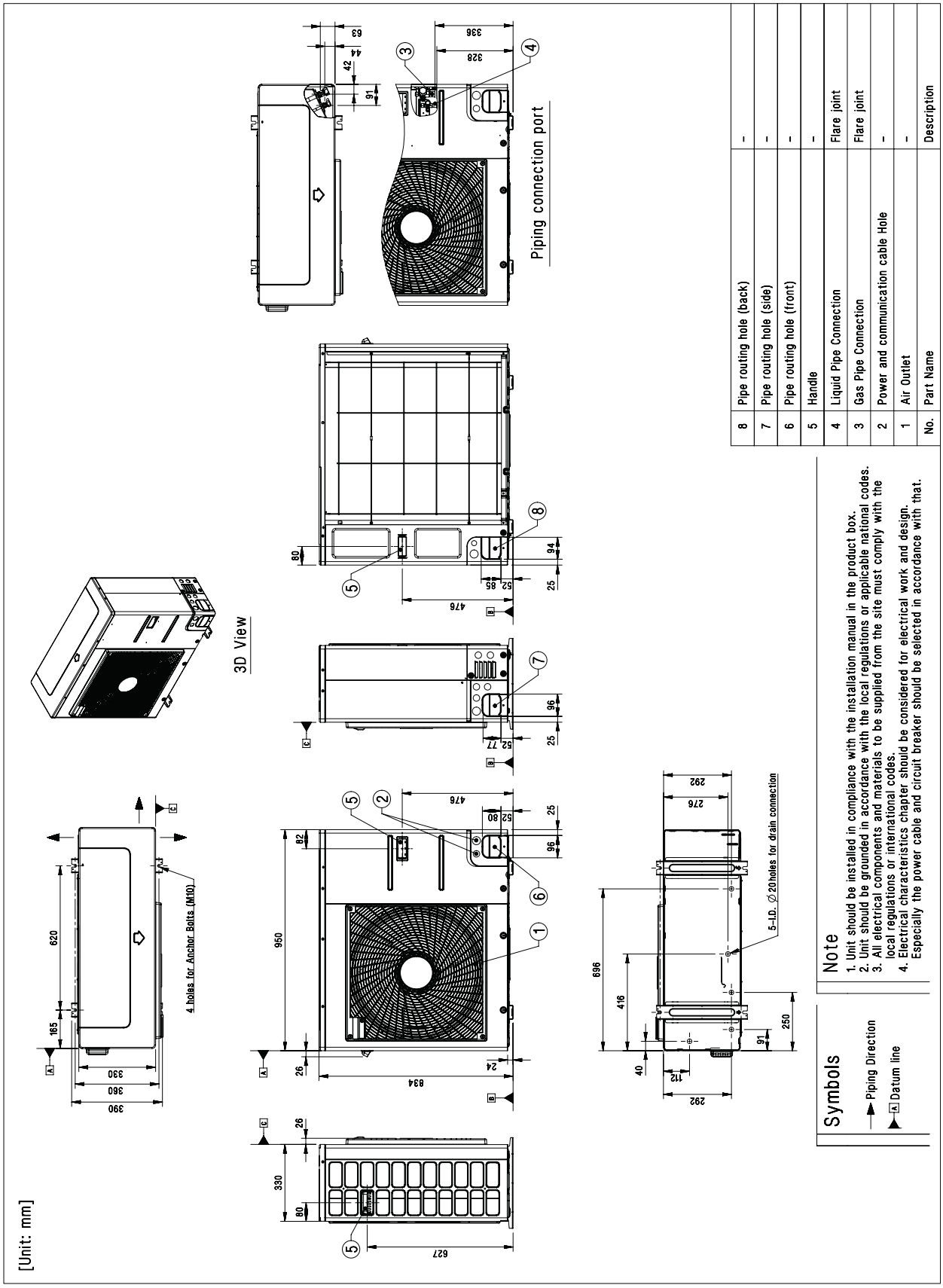

No.	Part Name	Description
8	Pipe routing hole (back)	-
7	Pipe routing hole (side)	-
6	Pipe routing hole (front)	-
5	Handle	-
4	Liquid Pipe Connection	Flare joint
3	Gas Pipe Connection	Flare joint
2	Power and communication cable Hole	-
1	Air Outlet	-

4. Piping diagrams

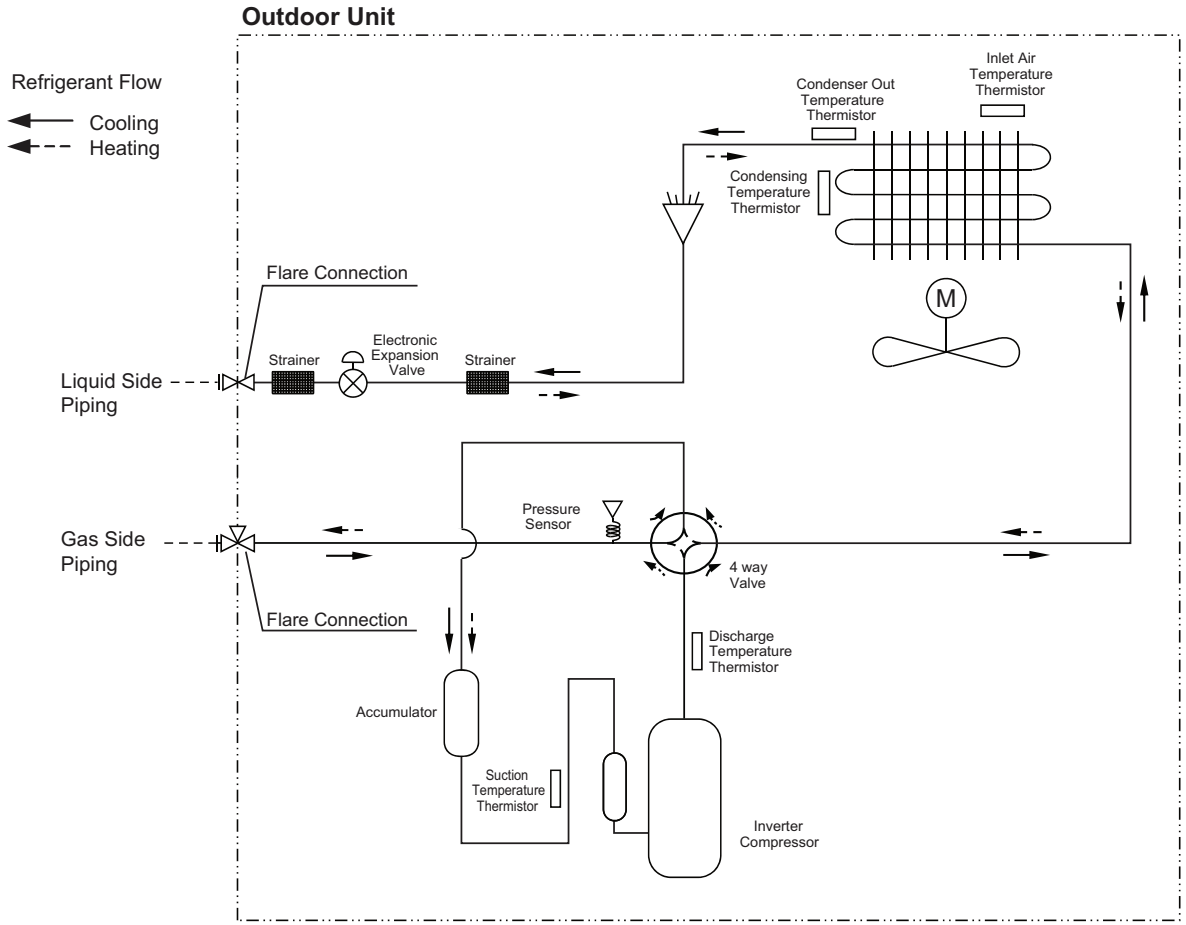

Description	AUUW18GC0 [UU18WC UL0] AUUW24GC0 [UU24WC UE0] AUUW30GC0 [UU30WC UE0]	AUUW36GC0 [UU36WC U40]
Suction Temperature Thermistor	CN_TH2	CN_SUCTION
Discharge Temperature Thermistor		CN_DISCHARGE
Condenser Out Temperature Thermistor	CN_TH1	CN_C_PIPE
Inlet Air Temperature Thermistor		CN_AIR
Condensing Temperature Thermistor	CN_TH3	CN_MID
Pressure Sensor	CN_PRESS	CN_H_PRESS

■ Refrigerant pipe connection port diameters

Model	Gas	Liquid
AUUW18GC0 [UU18WC UL0]	Ø12.7	Ø6.35
AUUW24GC0 [UU24WC UE0]	Ø15.88	Ø9.52
AUUW30GC0 [UU30WC UE0]	Ø15.88	Ø9.52
AUUW36GC0 [UU36WC U40]	Ø15.88	Ø9.52

5. Wiring diagrams

◆ Models : AUUW18GC0 [UU18WC UL0]

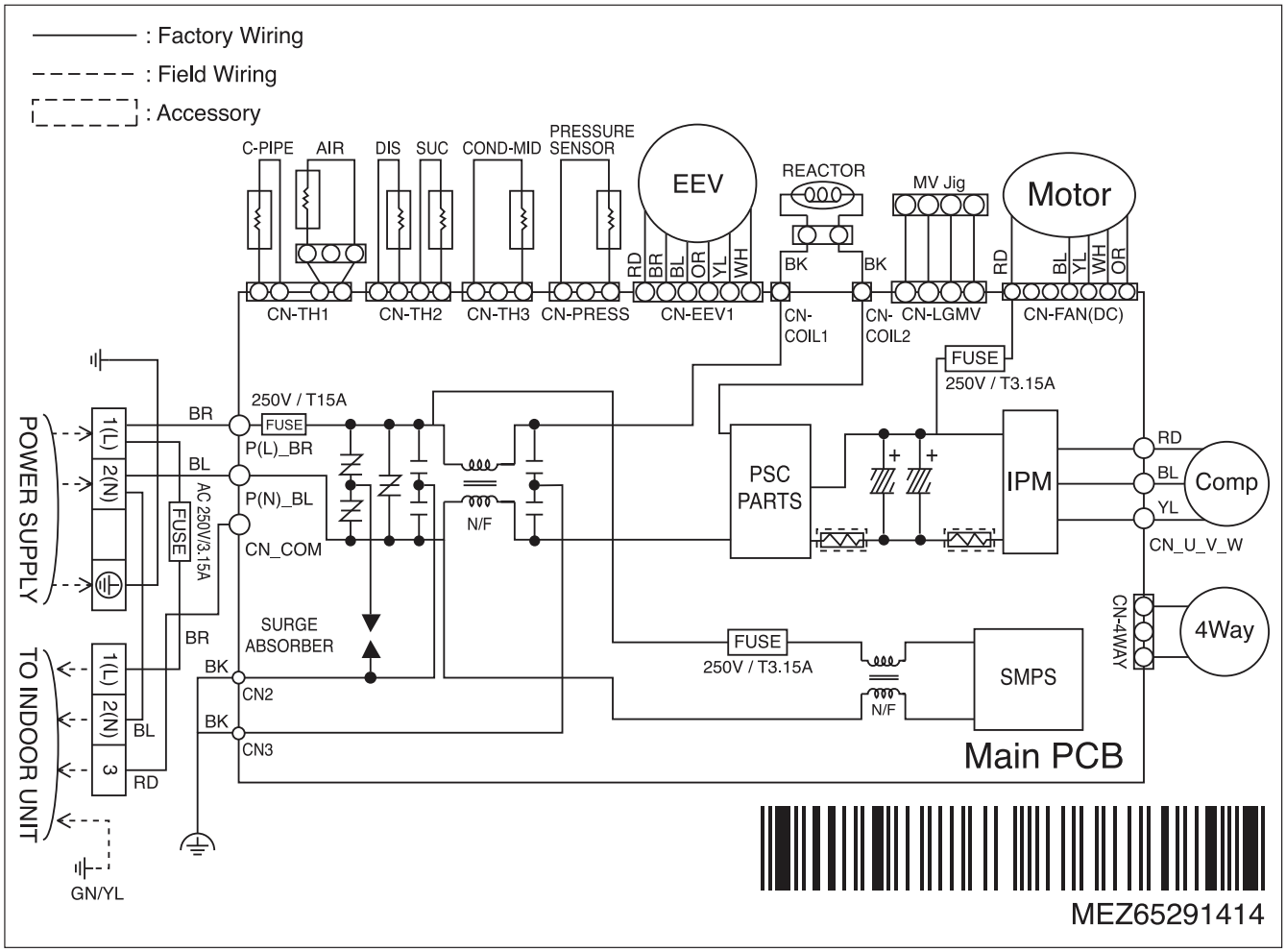

5. Wiring diagrams

◆ Models : AUUW24GC0 [UU24WC UE0], AUUW30GC0 [UU30WC UE0]

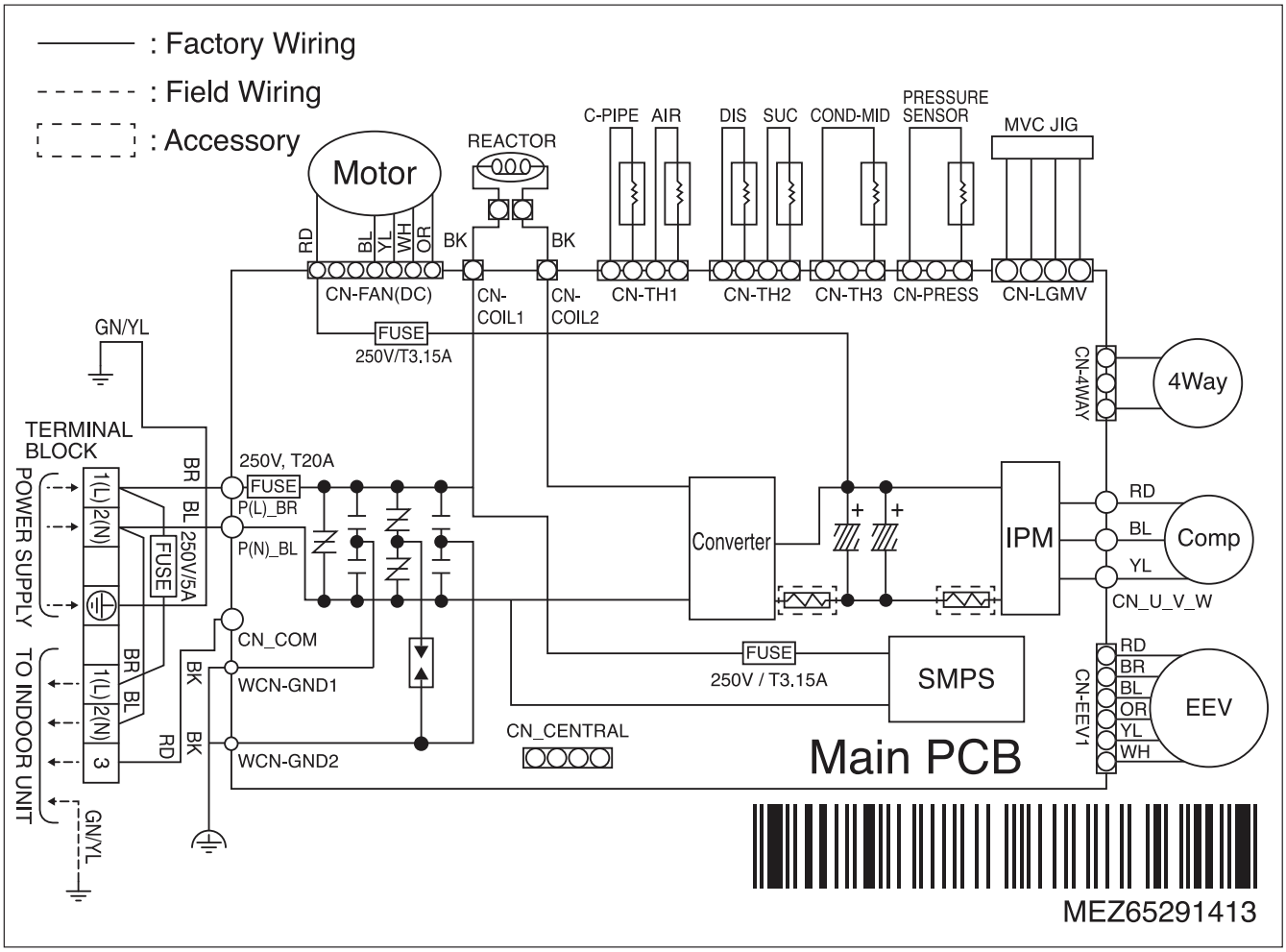

5. Wiring diagrams

◆ Models : AUUW36GC0 [UU36WC U40]

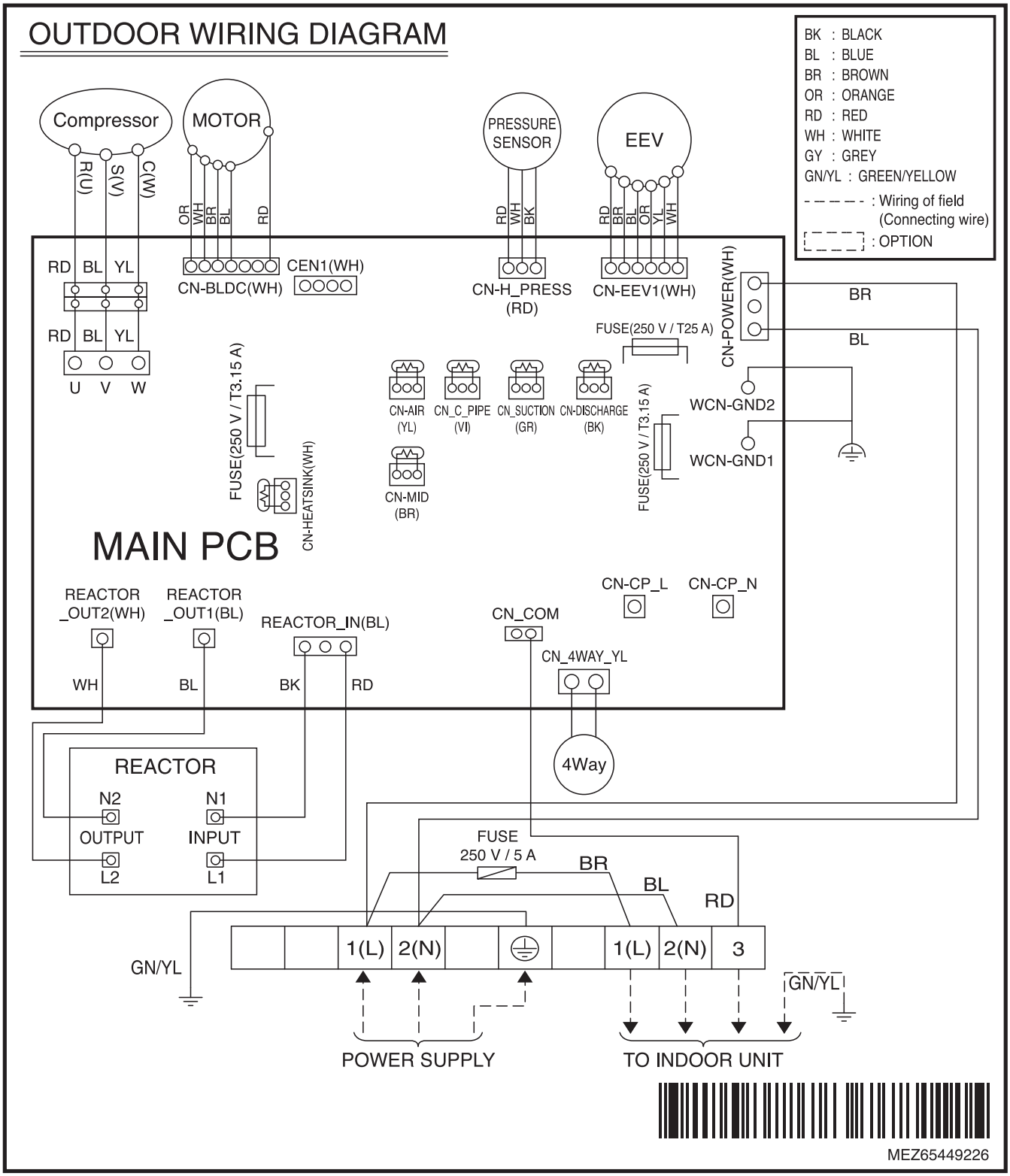

6. Capacity tables

6.1 Models : AUUW18GC0 + ABNW18GBHC0 [UU18WC UL0] [UB18C NH0]

◆ Cooling Capacity

Outdoor Air Temp.	Indoor Air Temperature : °CDB / °CWB																	
	20 / 14.0			22.0 / 16.0			25.0 / 18.0			27.0 / 19.0			30.0 / 22.0			32.0 / 24.0		
°CDB	TC	SHC	PI	TC	SHC	PI	TC	SHC	PI	TC	SHC	PI	TC	SHC	PI	TC	SHC	PI
20.0	3.30	2.92	0.78	4.13	3.44	1.03	4.76	3.95	1.28	5.24	4.21	1.33	5.72	4.13	1.37	6.08	4.08	1.38
25.0	3.12	2.83	0.85	3.95	3.35	1.11	4.58	3.86	1.38	5.06	4.12	1.43	5.54	4.05	1.48	5.90	4.00	1.49
32.0	2.87	2.71	0.97	3.70	3.23	1.23	4.33	3.74	1.52	4.81	4.00	1.57	5.29	3.93	1.62	5.65	3.88	1.63
35.0	2.76	2.66	1.02	3.59	3.18	1.28	4.22	3.69	1.58	4.70	3.95	1.63	5.18	3.87	1.68	5.54	3.82	1.69
40.0	2.58	2.57	1.11	3.41	3.09	1.37	3.64	3.25	1.33	4.07	3.47	1.37	4.50	3.40	1.41	4.82	3.36	1.41
43.0	2.47	2.47	1.16	3.30	3.04	1.42	3.29	2.97	1.17	3.69	3.18	1.21	4.09	3.12	1.24	4.39	3.08	1.25
46.0	2.36	2.36	1.21	3.19	2.99	1.47	2.94	2.69	1.02	3.31	2.89	1.05	3.67	2.83	1.08	3.95	2.79	1.08
48.0	2.29	2.29	1.24	3.12	2.95	1.50	2.71	2.50	0.92	3.06	2.69	0.94	3.40	2.63	0.97	3.66	2.60	0.97

- **Rate of change in TC and PI due to the indoor unit at standard temperature condition.**

Model		Correction factor	
		TC	PI
AUUW18GC0 [UU18WC UL0]	Max.	1.09	1.15
	Rated	1.00	1.00

◆ Heating Capacity

Outdoor Air Temp.	Indoor Air Temperature : °CDB									
	16.0		18.0		20.0		22.0		24.0	
°CWB	TC	PI	TC	PI	TC	PI	TC	PI	TC	PI
-20.0	1.63	0.61	1.61	0.75	1.59	0.89	1.58	1.11	1.56	1.32
-15.0	2.53	0.89	2.51	1.03	2.50	1.17	2.48	1.36	2.46	1.55
-10.0	3.43	1.17	3.42	1.31	3.40	1.45	3.38	1.61	3.37	1.78
-5.0	4.33	1.45	4.32	1.59	4.30	1.73	4.28	1.86	4.27	2.00
0.0	5.24	1.73	5.22	1.86	5.20	2.00	4.99	1.89	4.78	1.78
6.0	5.76	1.84	5.48	1.75	5.20	1.67	4.99	1.59	4.78	1.50
10.0	5.76	1.73	5.48	1.59	5.20	1.45	4.99	1.38	4.78	1.32
15.0	5.76	1.45	5.48	1.31	5.20	1.17	4.99	1.13	4.78	1.09
18.0	5.76	1.28	5.48	1.14	5.20	1.00	4.99	0.98	4.78	0.96

- **Rate of change in TC and PI due to the indoor unit at standard temperature condition.**

Model		Correction factor	
		TC	PI
AUUW18GC0 [UU18WC UL0]	Max.	1.10	1.15
	Rated	1.00	1.00

Note

1. DB : Dry bulb temperature(℃), WB : Wet bulb temperature(℃)
2. TC : Total capacity(kW), SHC : Sensible Heating Capacity(kW)
3. PI : Power Input (kW, Compressor + indoor fan motor + outdoor fan motor)
4. All capacities are net. A deduction (cooling mode) or an addition (heating mode) of Capacity due to operating heat of indoor unit motor is reflected.
5. Direct interpolation is permissible. Do not extrapolate.
6. Rated capacities and power inputs are based on standard temperature and piping conditions, and it can be found on specifications table. Except for rated value, the performance is not guaranteed.
7. In accordance with the test standard(or nations), the rating will vary slightly.

6.2 Models : AUUW24GC0 + ABNW24GBHC0 [UU24WC UL0] [UB24C NH0]

◆ Cooling Capacity

Outdoor Air Temp.	Indoor Air Temperature : °CDB / °CWB																	
	20 / 14.0			22.0 / 16.0			25.0 / 18.0			27.0 / 19.0			30.0 / 22.0			32.0 / 24.0		
°CDB	TC	SHC	PI	TC	SHC	PI	TC	SHC	PI	TC	SHC	PI	TC	SHC	PI	TC	SHC	PI
20	4.77	3.87	1.11	5.97	4.56	1.47	6.88	5.24	1.82	7.58	5.58	1.89	8.27	5.48	1.96	8.8	5.42	1.98
25	4.51	3.76	1.22	5.71	4.44	1.59	6.62	5.12	1.97	7.32	5.47	2.04	8.01	5.37	2.11	8.54	5.30	2.12
32	4.15	3.60	1.39	5.35	4.28	1.76	6.26	4.96	2.17	6.96	5.30	2.24	7.65	5.21	2.31	8.18	5.14	2.33
35	3.99	3.53	1.46	5.19	4.21	1.83	6.11	4.89	2.26	6.80	5.24	2.33	7.49	5.14	2.40	8.02	5.07	2.41
40	3.73	3.41	1.58	4.93	4.10	1.96	5.26	4.30	1.90	5.88	4.61	1.95	6.50	4.52	2.01	6.98	4.45	2.02
43	3.58	3.35	1.66	4.78	4.03	2.03	4.76	3.94	1.68	5.34	4.22	1.72	5.91	4.14	1.77	6.35	4.08	1.78
46	3.42	3.28	1.73	4.62	3.96	2.10	4.26	3.57	1.46	4.79	3.83	1.50	5.32	3.75	1.54	5.72	3.70	1.55
48	3.32	3.23	1.78	4.52	3.91	2.15	3.92	3.32	1.31	4.42	3.56	1.35	4.92	3.49	1.38	5.30	3.44	1.39

- **Rate of change in TC and PI due to the indoor unit at standard temperature condition.**

Model		Correction factor	
		TC	PI
AUUW24GC0 [UU24WC UL0]	Max.	1.09	1.12
	Rated	1.00	1.00

◆ Heating Capacity

Outdoor Air Temp.	Indoor Air Temperature : °CDB									
	16.0		18.0		20.0		22.0		24.0	
°CWB	TC	PI	TC	PI	TC	PI	TC	PI	TC	PI
-20	2.35	0.88	2.33	1.08	2.30	1.28	2.28	1.59	2.25	1.90
-15	3.65	1.28	3.63	1.48	3.60	1.68	3.58	1.95	3.55	2.23
-10	4.95	1.68	4.93	1.88	4.90	2.08	4.88	2.32	4.85	2.55
-5	6.25	2.08	6.23	2.28	6.20	2.48	6.18	2.68	6.15	2.88
0	7.55	2.48	7.53	2.68	7.50	2.88	7.20	2.72	6.90	2.55
6	8.30	2.64	7.90	2.52	7.50	2.40	7.20	2.28	6.90	2.16
10	8.30	2.48	7.90	2.28	7.50	2.08	7.20	1.99	6.90	1.90
15	8.30	2.08	7.90	1.88	7.50	1.68	7.20	1.63	6.90	1.57
18	8.30	1.84	7.90	1.64	7.50	1.44	7.20	1.41	6.90	1.38

- **Rate of change in TC and PI due to the indoor unit at standard temperature condition.**

Model		Correction factor	
		TC	PI
AUUW24GC0 [UU24WC UL0]	Max.	1.09	1.11
	Rated	1.00	1.00

Note

1. DB : Dry bulb temperature(℃), WB : Wet bulb temperature(℃)
2. TC : Total capacity(kW), SHC : Sensible Heating Capacity(kW)
3. PI : Power Input (kW, Compressor + indoor fan motor + outdoor fan motor)
4. All capacities are net. A deduction (cooling mode) or an addition (heating mode) of Capacity due to operating heat of indoor unit motor is reflected.
5. Direct interpolation is permissible. Do not extrapolate.
6. Rated capacities and power inputs are based on standard temperature and piping conditions, and it can be found on specifications table. Except for rated value, the performance is not guaranteed.
7. In accordance with the test standard(or nations), the rating will vary slightly.

6. Capacity tables

6.3 Models : AUUW30GC0 + ABNW30GM1A0 [UU30WC UE0] [UM30 N14]

◆ Cooling Capacity

Outdoor Air Temp.	Indoor Air Temperature : °CDB / °CWB																	
	20 / 14.0			22.0 / 16.0			25.0 / 18.0			27.0 / 19.0			30.0 / 22.0			32.0 / 24.0		
°CDB	TC	SHC	PI	TC	SHC	PI	TC	SHC	PI	TC	SHC	PI	TC	SHC	PI	TC	SHC	PI
20	5.26	4.38	1.28	6.58	5.16	1.69	7.59	5.93	2.10	8.36	6.31	2.18	9.12	6.20	2.26	9.71	6.13	2.28
25	4.97	4.25	1.40	6.30	5.03	1.83	7.31	5.80	2.27	8.07	6.18	2.35	8.84	6.07	2.43	9.42	6.00	2.44
32	4.57	4.07	1.60	5.90	4.84	2.02	6.91	5.62	2.50	7.67	6.00	2.58	8.44	5.89	2.66	9.02	5.82	2.68
35	4.40	3.99	1.68	5.73	4.77	2.11	6.73	5.54	2.60	7.50	5.93	2.68	8.27	5.81	2.76	8.85	5.74	2.78
40	4.12	3.86	1.82	5.44	4.64	2.25	6.06	5.09	2.28	6.78	5.45	2.35	7.50	5.34	2.41	8.04	5.27	2.43
43	3.95	3.79	1.90	5.27	4.56	2.33	5.66	4.81	2.09	6.35	5.15	2.15	7.03	5.05	2.21	7.56	4.98	2.22
46	3.77	3.71	1.99	5.10	4.48	2.42	5.26	4.52	1.90	5.91	4.85	1.95	6.57	4.76	2.00	7.07	4.69	2.01
48	3.66	3.66	2.05	4.98	4.43	2.47	4.99	4.33	1.77	5.63	4.65	1.81	6.26	4.56	1.86	6.75	4.50	1.87

- **Rate of change in TC and PI due to the indoor unit at standard temperature condition.**

Model		Correction factor	
		TC	PI
AUUW30GC0 [UU30WC UE0]	Max.	1.04	1.18
	Rated	1.00	1.00

◆ Heating Capacity

Outdoor Air Temp.	Indoor Air Temperature : °CDB									
	16.0		18.0		20.0		22.0		24.0	
°CWB	TC	PI	TC	PI	TC	PI	TC	PI	TC	PI
-20.0	5.25	1.04	5.21	1.20	5.16	1.36	5.13	1.58	5.09	1.80
-15.0	5.96	1.36	5.91	1.52	5.87	1.68	5.83	1.88	5.80	2.08
-10.0	6.67	1.68	6.62	1.84	6.58	2.00	6.54	2.18	6.51	2.36
-5.0	7.38	2.00	7.33	2.15	7.29	2.31	7.25	2.47	7.22	2.63
0.0	8.08	2.31	8.04	2.47	8.00	2.63	7.68	2.49	7.36	2.36
6.0	8.86	2.48	8.43	2.36	8.00	2.25	7.68	2.14	7.36	2.03
10.0	8.86	2.31	8.43	2.15	8.00	2.00	7.68	1.90	7.36	1.80
15.0	8.86	2.00	8.43	1.84	8.00	1.68	7.68	1.60	7.36	1.53
18.0	8.86	1.80	8.43	1.64	8.00	1.49	7.68	1.42	7.36	1.36

- **Rate of change in TC and PI due to the indoor unit at standard temperature condition.**

Model		Correction factor	
		TC	PI
AUUW30GC0 [UU30WC UE0]	Max.	1.10	1.15
	Rated	1.00	1.00

Note

1. DB : Dry bulb temperature(℃), WB : Wet bulb temperature(℃)
2. TC : Total capacity(kW), SHC : Sensible Heating Capacity(kW)
3. PI : Power Input (kW, Compressor + indoor fan motor + outdoor fan motor)
4. All capacities are net. A deduction (cooling mode) or an addition (heating mode) of Capacity due to operating heat of indoor unit motor is reflected.
5. Direct interpolation is permissible. Do not extrapolate.
6. Rated capacities and power inputs are based on standard temperature and piping conditions, and it can be found on specifications table. Except for rated value, the performance is not guaranteed.
7. In accordance with the test standard(or nations), the rating will vary slightly.

6.4 Models : AUUW36GC0 + ABNW36GM2A0 [UU36WC U40] [UM36 N24]

◆ Cooling Capacity

Outdoor Air Temp.	Indoor Air Temperature : °CDB / °CWB																	
	20 / 14.0			22.0 / 16.0			25.0 / 18.0			27.0 / 19.0			30.0 / 22.0			32.0 / 24.0		
°CDB	TC	SHC	PI	TC	SHC	PI	TC	SHC	PI	TC	SHC	PI	TC	SHC	PI	TC	SHC	PI
20.0	6.66	5.48	1.59	8.34	6.45	2.11	9.62	7.41	2.62	10.59	7.90	2.72	11.56	7.76	2.82	12.29	7.67	2.84
25.0	6.30	5.32	1.75	7.98	6.29	2.28	9.25	7.25	2.83	10.22	7.73	2.93	11.19	7.60	3.03	11.93	7.50	3.05
32.0	5.79	5.09	1.99	7.47	6.06	2.53	8.75	7.02	3.12	9.72	7.51	3.22	10.69	7.37	3.33	11.42	7.28	3.35
35.0	5.58	4.99	2.10	7.25	5.96	2.64	8.53	6.93	3.25	9.50	7.41	3.35	10.47	7.27	3.45	11.21	7.18	3.47
40.0	5.21	4.83	2.28	6.89	5.80	2.81	7.68	6.36	2.85	8.59	6.81	2.93	9.49	6.68	3.02	10.18	6.59	3.04
43.0	5.00	4.73	2.38	6.67	5.70	2.58	7.17	6.01	2.61	8.04	6.44	2.68	8.91	6.31	2.76	9.57	6.23	2.77
46.0	4.78	4.64	2.32	6.46	5.60	2.35	6.66	5.66	2.37	7.49	6.07	2.43	8.32	5.95	2.50	8.96	5.87	2.51
48.0	4.63	4.57	2.17	6.31	5.54	2.19	6.32	5.42	2.21	7.13	5.82	2.27	7.93	5.70	2.33	8.55	5.62	2.34

- **Rate of change in TC and PI due to the indoor unit at standard temperature condition.**

Model		Correction factor	
		TC	PI
AUUW36GC0 [UU36WC U40]	Max.	1.05	1.10
	Rated	1.00	1.00

◆ Heating Capacity

Outdoor Air Temp.	Indoor Air Temperature : °CDB									
	16.0		18.0		20.0		22.0		24.0	
°CWB	TC	PI	TC	PI	TC	PI	TC	PI	TC	PI
-20.0	6.56	1.35	6.51	1.56	6.45	1.77	6.41	2.06	6.36	2.35
-15.0	7.45	1.77	7.39	1.98	7.34	2.18	7.29	2.45	7.25	2.71
-10.0	8.33	2.18	8.28	2.39	8.23	2.60	8.18	2.83	8.13	3.07
-5.0	9.22	2.60	9.17	2.81	9.11	3.01	9.07	3.22	9.02	3.43
0.0	10.11	3.01	10.05	3.22	10.00	3.43	9.60	3.25	9.20	3.07
6.0	11.07	3.22	10.54	3.08	10.00	2.93	9.60	2.78	9.20	2.64
10.0	11.07	3.01	10.54	2.81	10.00	2.60	9.60	2.47	9.20	2.35
15.0	11.07	2.60	10.54	2.39	10.00	2.18	9.60	2.09	9.20	1.99
18.0	11.07	2.35	10.54	2.14	10.00	1.93	9.60	1.85	9.20	1.77

- **Rate of change in TC and PI due to the indoor unit at standard temperature condition.**

Model		Correction factor	
		TC	PI
AUUW36GC0 [UU36WC U40]	Max.	1.05	1.11
	Rated	1.00	1.00

Note

1. DB : Dry bulb temperature(℃), WB : Wet bulb temperature(℃)
2. TC : Total capacity(kW), SHC : Sensible Heating Capacity(kW)
3. PI : Power Input (kW, Compressor + indoor fan motor + outdoor fan motor)
4. All capacities are net. A deduction (cooling mode) or an addition (heating mode) of Capacity due to operating heat of indoor unit motor is reflected.
5. Direct interpolation is permissible. Do not extrapolate.
6. Rated capacities and power inputs are based on standard temperature and piping conditions, and it can be found on specifications table. Except for rated value, the performance is not guaranteed.
7. In accordance with the test standard(or nations), the rating will vary slightly.

7. Capacity coefficient factor

7.1 Rate of change in capacity due to the main piping length

■ Rate of change in cooling capacity

Piping length(m)		5	10	15	20	30	35	40
Rate of change in capacity(%)	5.0/7.0 kW	100	99.3	97.9	96.6	93.8	-	-
	8.0 kW	100	99.3	97.9	96.6	93.8	92.4	-
	10.0 kW	100	99.3	97.9	96.6	93.8	92.4	91.1

■ Rate of change in heating capacity

Piping length(m)		5	10	15	20	30		40
Rate of change in capacity(%)	5.0/7.0 kW	100	99.7	99.2	98.7	97.7		-
	8.0 kW	100	99.7	99.2	98.5	97.7	97.1	-
	10.0 kW	100	99.7	99.2	98.5	97.7	97.1	96.6

7.2 Calculation of actual system capacity

1. **Outdoor unit capacity at Ti, To temperature.**
   $Q_{(Ti,\ To)}$ [from capacity table]
2. **Piping correction factor**
   F_{piping} for piping length [from capacity coefficient factor table]
3. **Indoor Unit actual capacity**
   $Q_{actual} = T_{(Ti,\ To)} \times F_{piping}$

8. Operation range

◆ **Models : AUUW18GC0 [UU18WC UL0], AUUW30GC0 [UU30WC UE0]**
AUUW36GC0 [UU36WC U40]

Cooling

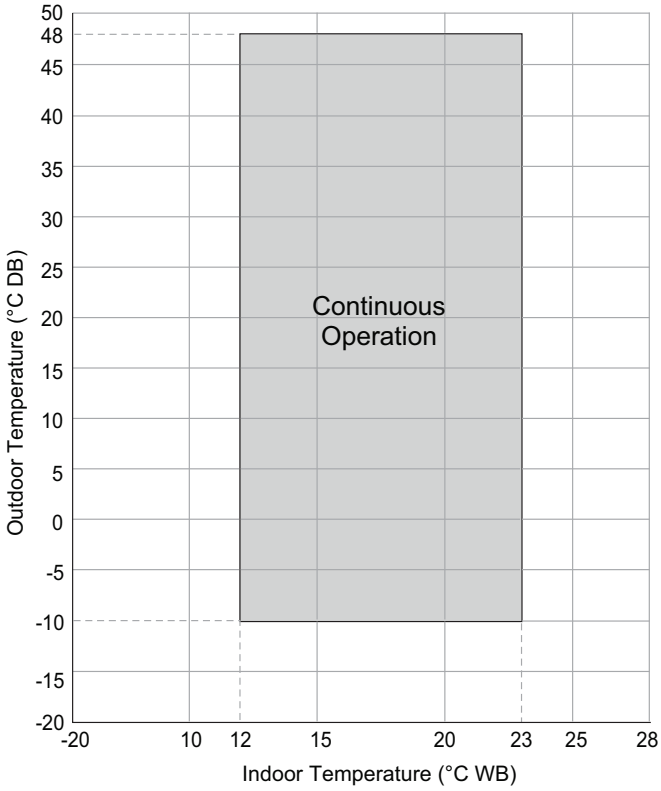

Heating

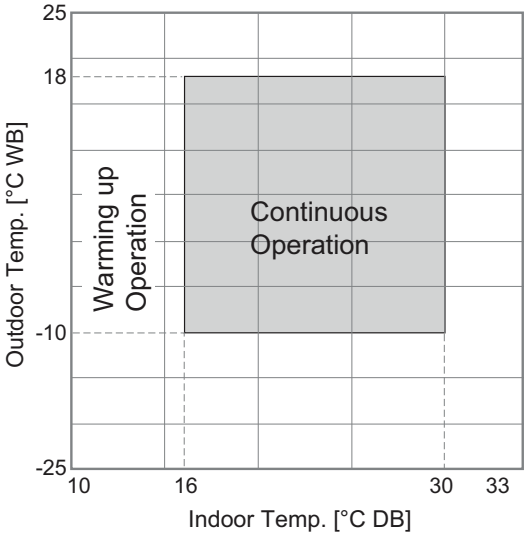

8. Operation range

◆ Models : AUUW24GC0 [UU24WC UE0]

Cooling

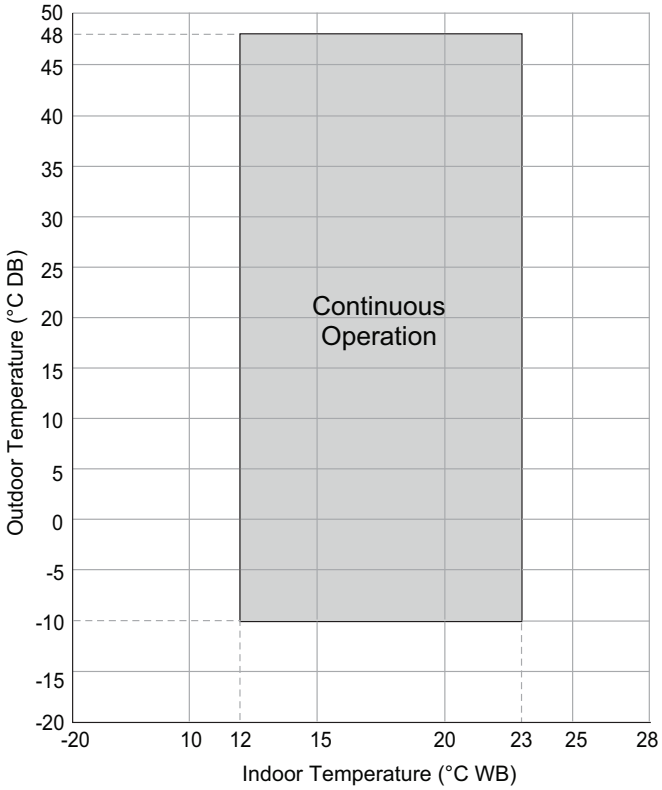

Heating

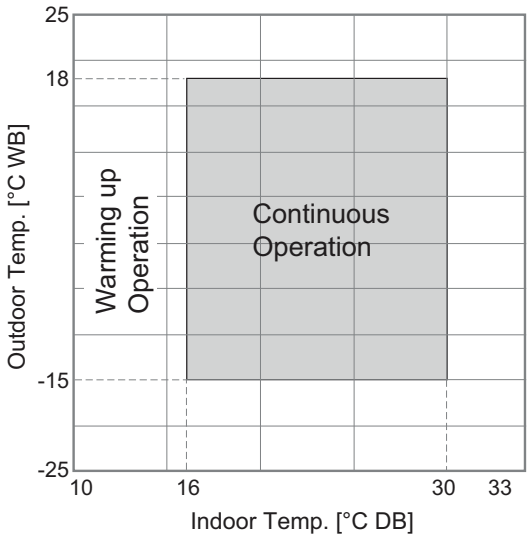

9. Electric characteristics

- The power supply work is needed only to the outdoor unit. The power supply to the indoor unit is conducted through the transmission wiring. Therefore, the power supply work can be carried out at just one place of the outdoor unit. It will contribute to simplify the work procedure and to save cost.
- Wiring cable size must comply with the applicable local and national code.

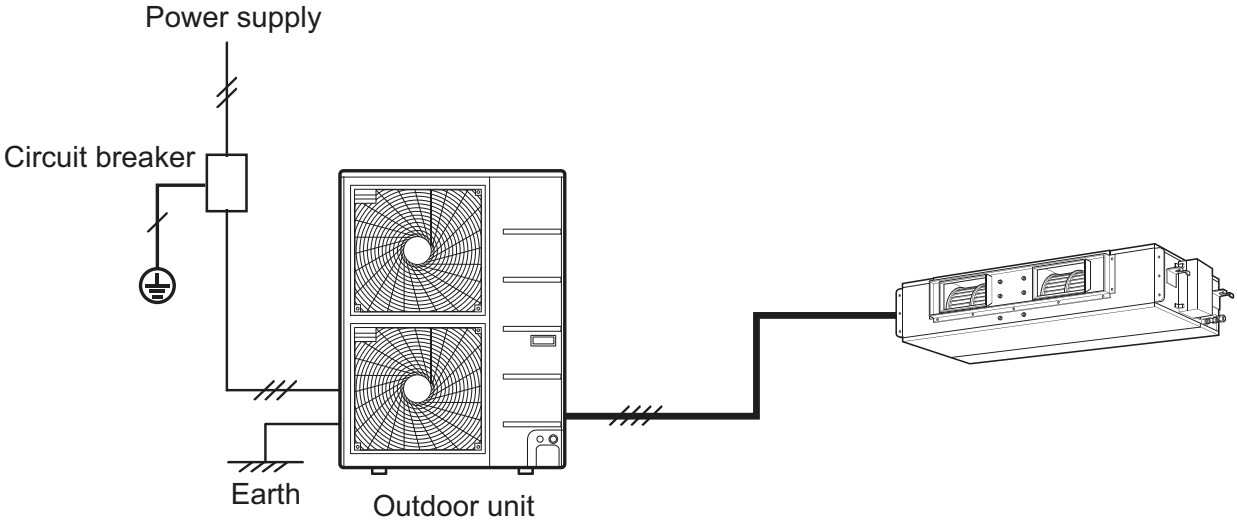

Outdoor Unit Model names	Combined Indoor Unit		Unit				Power Supply		COMP		OFM		IFM	
	Model names	No. of Units	Phase	Hz	Volts	Voltagerange	MCA	MFA (MOP)	MSC	RLA	kW	FLA	kW	FLA
AUUW18GC0 [UU18WC UL0]	ABNW18GBHC0 [UB18C NH0]	1	1Ø	50	220 - 240	Min.:198 Max.:264	12.6	15	-	10.0	0.043	0.25	0.154	0.80
AUUW24GC0 [UU24WC UE0]	ABNW24GBHC0 [UB24C NH0]	1					17.9	20	-	15.0	0.085	0.33	0.154	1.10
AUUW30GC0 [UU30WC UE0]	ABNW30GM1A0 [UM30 N14]	1					18.4	20	-	15.0	0.085	0.33	0.137	0.80
AUUW36GC0 [UU36WC U40]	ABNW36GM2A0 [UM36 N24]	1					21.2	25	-	17.0	0.124	0.48	0.350	1.14

Note

1. Voltage supplied to the unit terminals should be within the minimum and maximum range.
2. Maximum allowable voltage unbalance between phase is 2%.
3. MSC means the Max. current during the starting of compressor.
4. MSC and RLA are measured as the compressor only test condition.
5. OFM and IFM are measured as the outdoor unit test condition.
6. Select the wire size based on the MCA.
7. MFA is used to select the circuit breaker and ground fault circuit interrupter, and recommended circuit breaker type is ELCB(Earth Leakage Circuit Breaker).

MCA : Minimum Circuit Amperes (A)
MOP : Maximum rating over current protective device
MSC : Maximum Starting Current
RLA : Rated Load Amperes (A)
OFM : Outdoor Fan Motor
kW : Fan Motor rated output (kW)
FLA : Full Load Amperes (A)

10. Sound levels

10.1 Sound pressure level

◆ Overall

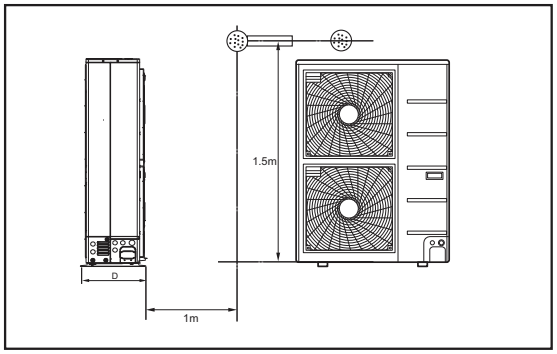

Note

1. Data is valid at free field condition.
2. Reference accoustic pressure 0dB = 20μPa.
3. Data is valid at nominal operation condition.
   Refer to the Model Specifications for nominal conditions(Power source and Ambient temperature, etc)
4. Sound levels can be increased in accordance with installation and operating conditions. (Static pressure mode, used air guide, Room target temperature setting, etc)
5. Sound level will vary depending on a range of factors such as the construction(acoustic absorption coefficient) of particular room in which the equipment in installed.

Model	220-240V , 50Hz [dB(A)]	
	Cooling	Heating
AUUW18GC0 [UU18WC UL0]	47	49
AUUW24GC0 [UU24WC UE0]	48	50
AUUW30GC0 [UU30WC UE0]	51	52
AUUW36GC0 [UU36WC U40]	54	56

AUUW18GC0 [UU18WC UL0]

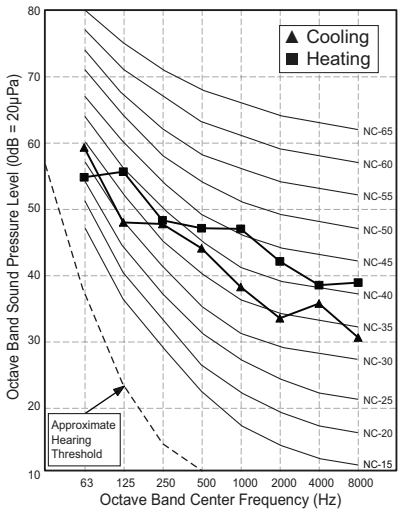

AUUW24GC0 [UU24WC UE0]

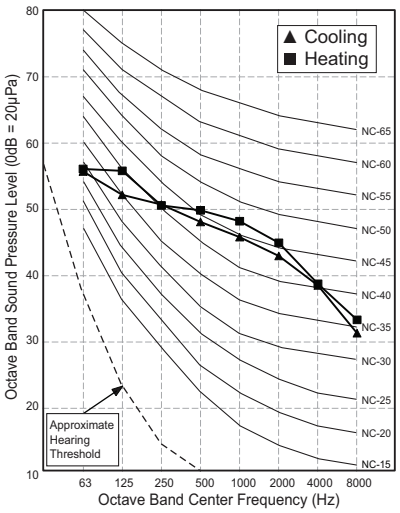

AUUW30GC0 [UU30WC UE0]

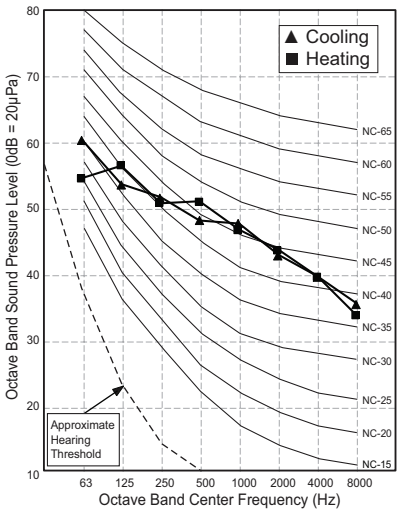

10. Sound levels

AUUW36GC0 [UU36WC U40]

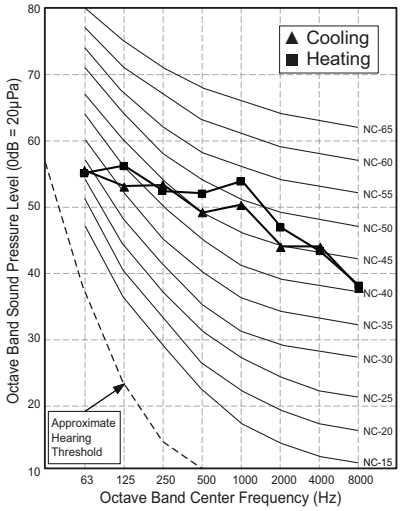

10. Sound levels

10.2 Sound power level

Note

1. Data is valid at diffuse field condition.
2. Reference acoustic intensity 0dB = 10E-6μW/$m^{2.}$
3. Data is valid at nominal operating condition.
4. Sound power level is measured on the nominal condition in the reverberation rooms.
5. Sound levels can be increased in accordance with installation and operating conditions. (Static pressure mode, used air guide, Room target temperature setting, etc)
6. Sound level will vary depending on a range of factors such as the construction (acoustic absorption coefficient) of particular room in which the equipment in installed.

Model	Sound power level [dB(A)]
	H
AUUW18GC0 [UU18WC UL0]	65
AUUW24GC0 [UU24WC UE0]	68
AUUW30GC0 [UU30WC UE0]	70
AUUW36GC0 [UU36WC U40]	70

AUUW18GC0 [UU18WC UL0]

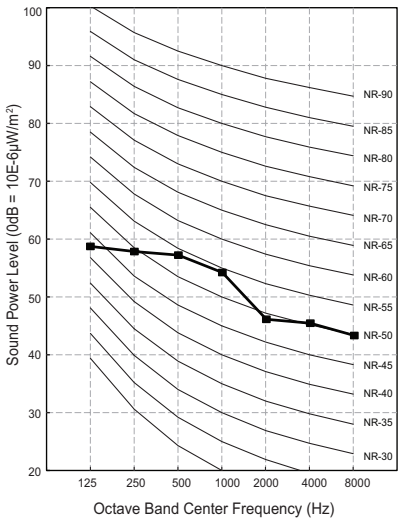

AUUW24GC0 [UU24WC UE0]

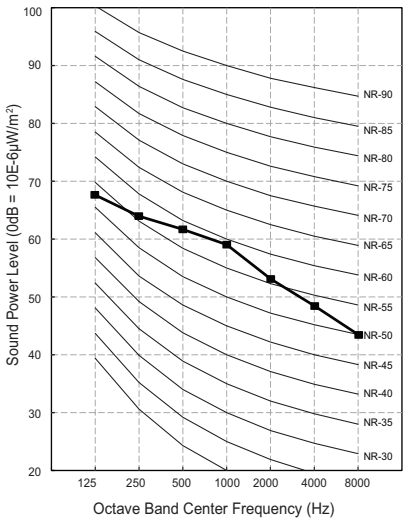

AUUW30GC0 [UU30WC UE0]

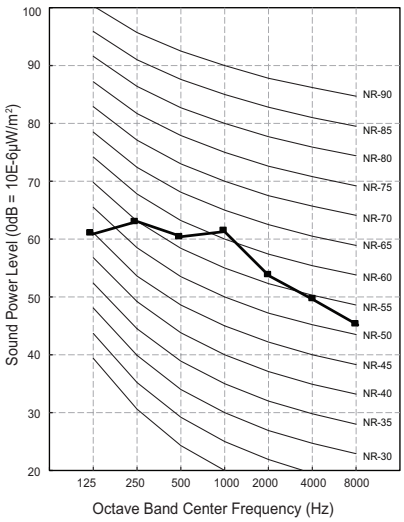

AUUW36GC0 [UU36WC U40]

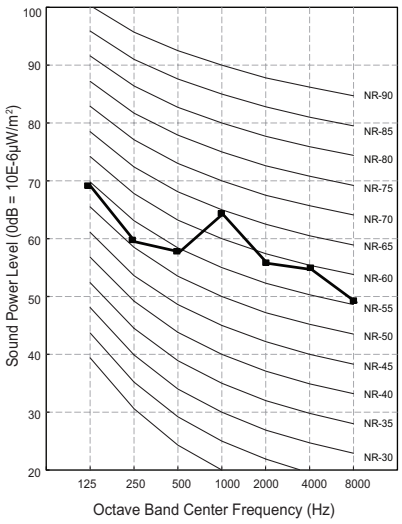

SINGLE A™

Outdoor Unit

Installation of Outdoor Units

1. Select the Best Location
2. Installation Space
3. Installation of Outdoor Unit
4. Refrigerant piping system
5. Installation guide at the seaside
6. Seasonal wind and cautions in winter

1. Select the Best Location

Select space for installing outdoor unit, which will meet the following conditions:

- No direct thermal radiation from other heat sources
- No possibility of annoying neighbors by noise from unit
- No exposition to strong wind
- With strength which bears weight of unit
- Note that drain flows out of unit when heating (Heat pump model)
- With space for air passage and service work shown next
- Because of the possibility of fire, do not install unit to the space where generation, inflow, stagnation, andleakage of combustible gas is expected.
- Avoid unit installation in a place where acidic solution and spray (sulfur) are often used.
- Do not use unit under any special environment where oil, steam and sulfuric gas exist.
- It is recommended to fence round the outdoor unit in order to prevent any person or animal from accessing theoutdoor unit.
- If installation site is area of heavy snowfall, then the following directions should be observed.
  - Make the foundation as high as possible.
  - Fit a snow protection hood.
- Select installation location considering following conditions to avoid bad condition when additionally performingdefrost operation. (Heat pump model)
  1. Install the outdoor unit at a place well ventilated and having a lot of sunshine in case of installing the product at a place with a high humidity in winter (near beach, coast, lake, etc).
     (Ex) Rooftop where sunshine always shines.
  2. Performance of heating will be reduced and pre-heat time of the indoor unit may be lengthened in case ofinstalling the outdoor unit in winter at following location:
     1) Shade position with a narrow space
     2) Location with much moisture in neighboring floor.
     3) Location with much humidity around.
     4) Location where liquid gathers since the floor is not even.

2. Installation Space

2.1 Clearance around outdoor units

- Ensure that the space around the back is or more more than 300 mm on the opposite to the PCB side and secure 600 mm space near the compressor and PCB side of the air conditioner for service.

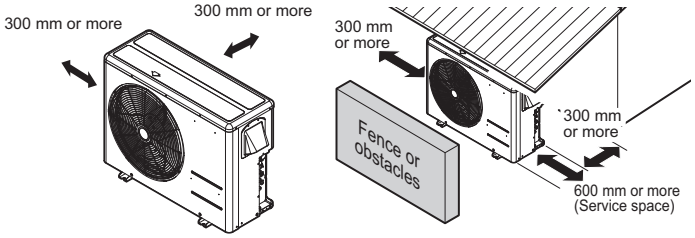

❈ Outdoor unit is representative. Actual appearance of outdoor unit may be different but clearances will stay the same.

- Install the unit so that its discharge port faces to the wall of the building. Keep a distance 500mm or more between the unit and the wall surface.
- Supposing the wind direction during the operation season of the air conditioner, install the unit so that the discharge port is set at right angle to the wind direction.

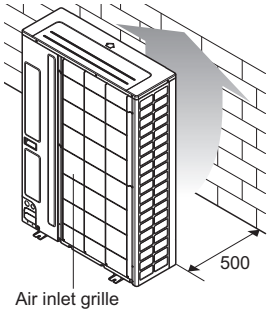

Turn the air outlet side toward the building's wall, fence or windbreak screen.

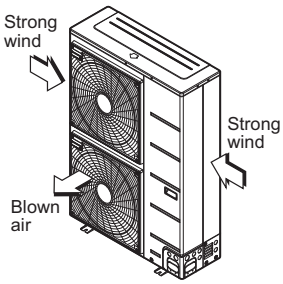

Set the outlet side at a right angle to the direction of the wind.

❈ Outdoor unit is representative. Actual appearance of outdoor unit may be different but clearances will stay the same.

2. Installation Space

◆ Where there is an obstacle on the air intake side:

■ No obstacle above

- Obstacle on the suction side only

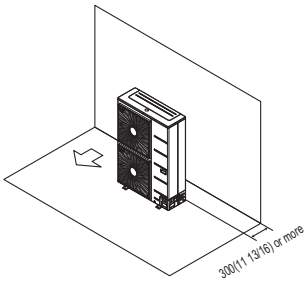

- Obstacle on the both sides

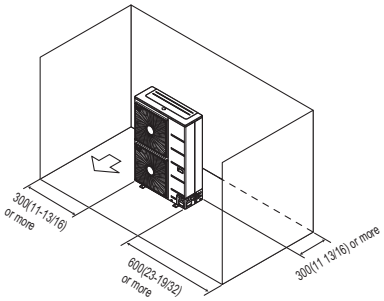

■ Obstacle above, too

- Obstacle on the air intake side, too

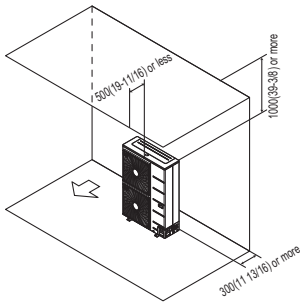

- Obstacle on the air intake side, and both sides

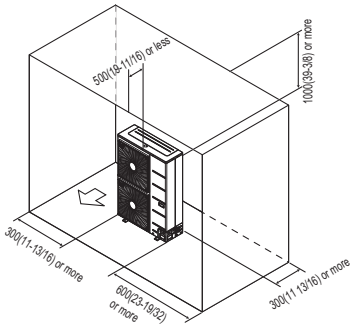

◆ Where there is an obstacle on the discharge side:

- No obstacle above

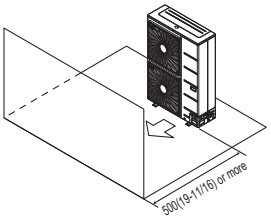

- Obstacle above, too

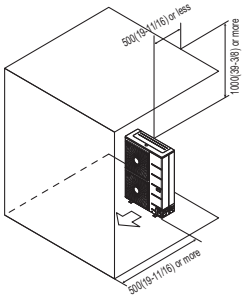

2. Installation Space

◆ Where there are obstacles on both suction and discharge sides:

■ Where the obstacles on the discharge side is higher than the unit:

- No obstacle above

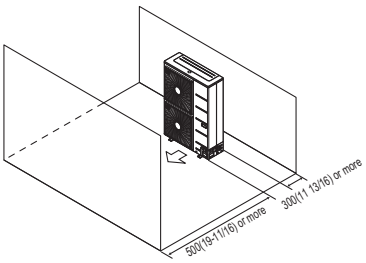

- Obstacle above, too

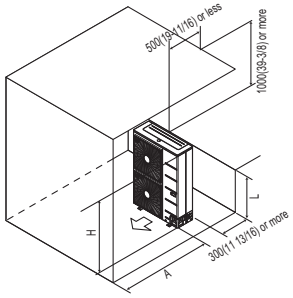

The relations between H, A and L are as follows:

	L	A[mm(inch)]
L ≤ H	0 < L ≤ 1/2H	750(29 1/32)
	1/2H < L	1 000(39 3/8)
H < L	Set the stand as: L ≤ H	

Close the bottom of the installation frame to prevent the discharged air from being bypassed.

■ Where the obstacles on the discharge side is lower than the unit:

- No obstacle above

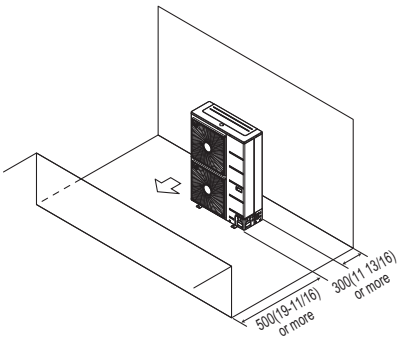

- Obstacle above, too
  'L' should be lower than 'H'.
  Close the bottom of the installation frame to prevent the discharged air from being bypassed.

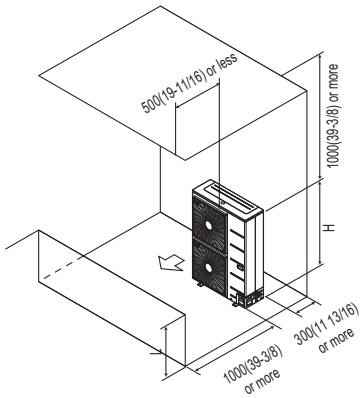

◆ Series installation

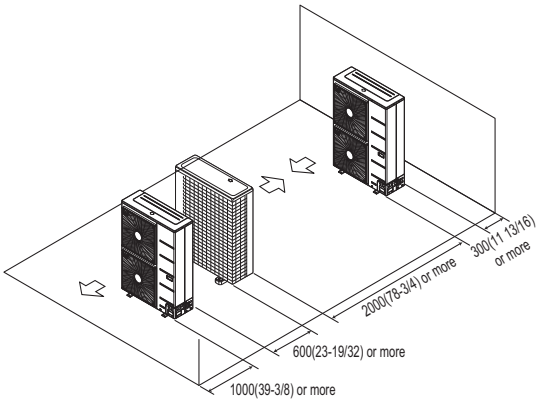

2. Installation Space

2.2 Air guide work

In case of out door unit is located outdoor cabin of apartment or flats, then the efficiency can drop and system pressure increases thus finally damaging the compressor or other components in the system by heat short circuit.

[Example]

<Without air guide>
Safety device activation

<With air guide>
Normal operation

2.3 Lightning safety zone

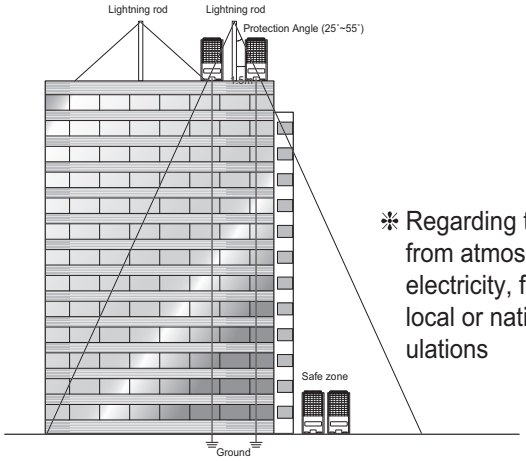

❊ Regarding the safety from atmosphere electricity, follow the local or national regulations

1. To protect outdoor unit from lightning, it should be placed within lightning safety zone.

■ Safety zone

Building Height [m]	20	30	45	60
Protection Angle [˚]	55	45	35	25

2. Power cable and communication cable should be 1.5m away from lightning rod.
3. High resistance grounded system should be performed against induced lightning or indirect stroke.
4. If the building has no lightning protection, outdoor may be damage from lightning. This should be informed to customer or building owner in advance.

3. Installation of Outdoor Unit

3.1 Foundation for Installation

- Fix the unit tightly with bolts as shown below so that unit will not fall down due to earthquake or gust.
- Use the H-beam support as a base support.
- Noise and vibration may occur from the floor or wall since vibration is transferred through the installation partdepending on installation status. Thus, use anti-vibration materials (cushion pad) fully (The base pad shall bemore than 200mm).

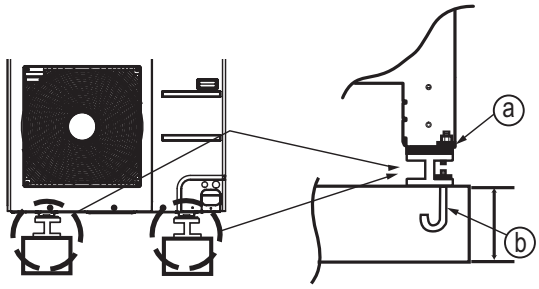

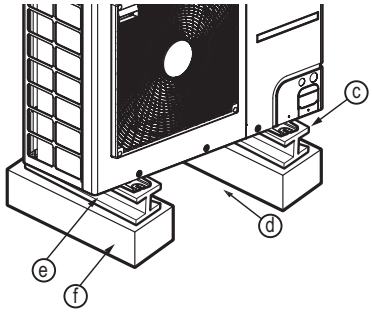

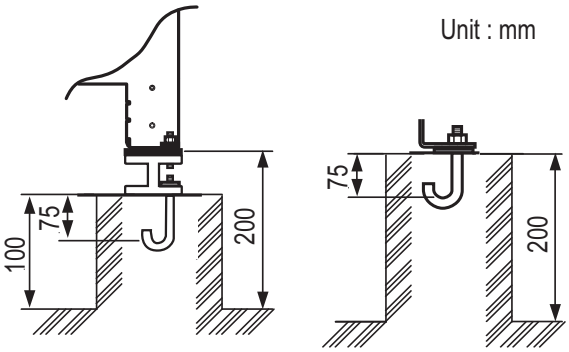

ⓐ The corner part must be fixed firmly. Otherwise, the support for the installation may be bent.
ⓑ Get and use M10 Anchor bolt.
ⓒ Put Cushion Pad between the outdoor unit and ground support for the vibration protection in wide area.
ⓓ Space for pipes and wiring (Pipes and wirings for bottom side)
ⓔ H-beam support
ⓕ Concrete support
❊ Outdoor unit is representative. Actual appearance of outdoor unit may be different but clearances will stay the same.

⚠ WARNING

- **Install where it can sufficiently support the weight of the outdoor unit.**
  If the support strength is not enough, the outdoor unit may drop and hurt people.
- **Install where the outdoor unit may not fall in strong wind or earthquake.**
  If there is a fault in the supporting conditions, the outdoor unit may fall and hurt people.
- **Please take extra cautions on the supporting strength of the ground, water outlet treatment(treatment of the water flowing out of the outdoor unit in operation) of heat pump unit, and the passages of the pipe and wiring, when making the ground support.**
- **Do not use tube or pipe for water outlet in the Base pan. Use drainage instead for water outlet.**
  The tube or pipe may freeze and the water may not be drained. (Heat pump model)

⚠ WARNING

- **Be sure to remove the Pallet(Wood Support) of the bottom side of the outdoor unit Base Pan before fixing the bolt. It may cause the unstable state of the outdoor settlement, and may cause freezing of the heat exchanger resulting in abnormal operations.**
- **Be sure to remove the Pallet(Wood Support) of the bottom side of the outdoor unit before welding. Not removing Pallet(Wood Support) causes hazard of fire during welding.**

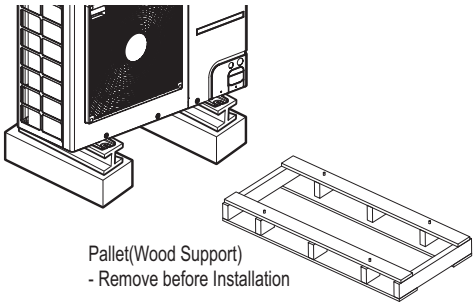

3. Installation of Outdoor Unit

3.2 Settlement of the outdoor unit

- Anchor the outdoor unit with a bolt and nut tightly and horizontally on a concrete or rigid mount.
- When installing on the wall, roof or rooftop, anchor the mounting base securely with a nail or wire assuming the influence of wind and earthquake.
- In the case when the vibration of the unit is conveyed to the house, secure the unit with an anti-vibration rubber.

■ Bolt construction work

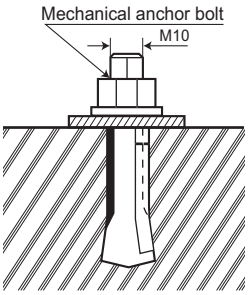

[Unit : mm]

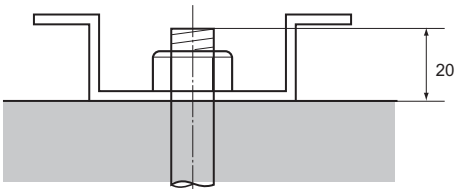

Diagram of lower surface

■ Settlement draw of outdoor units

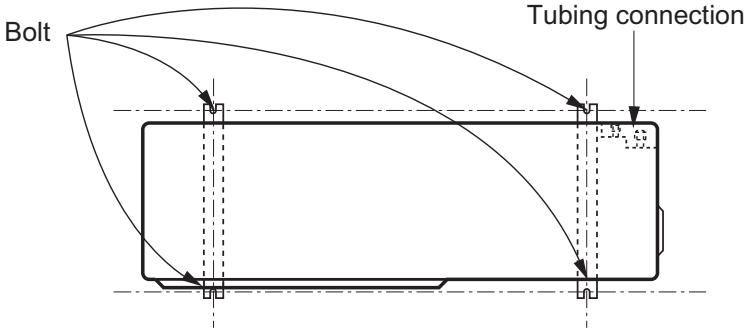

⚠ CAUTION

- The ingredients of foundation : Cement : Sand : Gravel for the concrete should 1 : 2 : 4 ratio
- The foundation surface should be finished with mortar.
- The edges of foundation should be rounded.
- A drain passage should be made around the foundation to thoroughly drain water away from the equipment installation area. (Heat pump model)
- If installing the outdoor units on the roof, the roof's strength have to be checked.
- Care should be taken for weather - proofing
- Blocking all gaps of outdoor unit, for passing piping and wiring, using sealing material (Field supply) (Animals and bugs might enter in the machine.)

4. Refrigerant piping system

4.1 Piping System between outdoor unit / indoor unit

◆ Single type

CAUTION

- Please check the product type. Piping installation and refrigerant charge varies depending on the type of product.
  For more information, please refer to the installation manual.

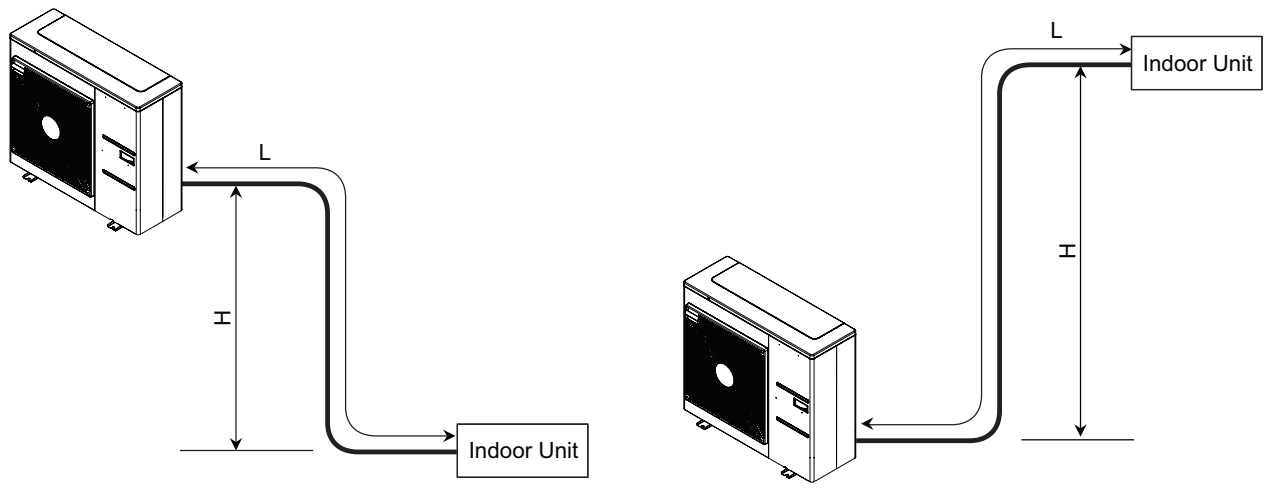

Notes
L (m) : Piping Length (Outdoor Unit ~ Indoor Unit)
H (m) : Height Difference (Outdoor Unit ~ Indoor Unit)

❊ Refer to the specifications of Outdoor Unit for Maximum limit.

■ Refrigerant additional charge calculation method

Additional Refrigerant = (L - A) x a

L (m) : Installed Piping Length (Outdoor Unit ~ Indoor Unit)

A (m) : Charge-less piping length

a (g/m) : Additional charging volume

* Refer to the specifications for detail information of A, a.
* If total additional charge value after calculation comes out to be negative, then do not consider additional charge.

CAUTION

- Capacity is based on standard length and maximum allowance length is on the basis of reliability.
- Improper refrigerant charge may result in abnormal cycle.

4. Refrigerant piping system

◆ Single type - Synchro

⚠ CAUTION

- Please check the product type. Piping installation and refrigerant charge varies depending on the type of product.
  For more information, please refer to the installation manual.

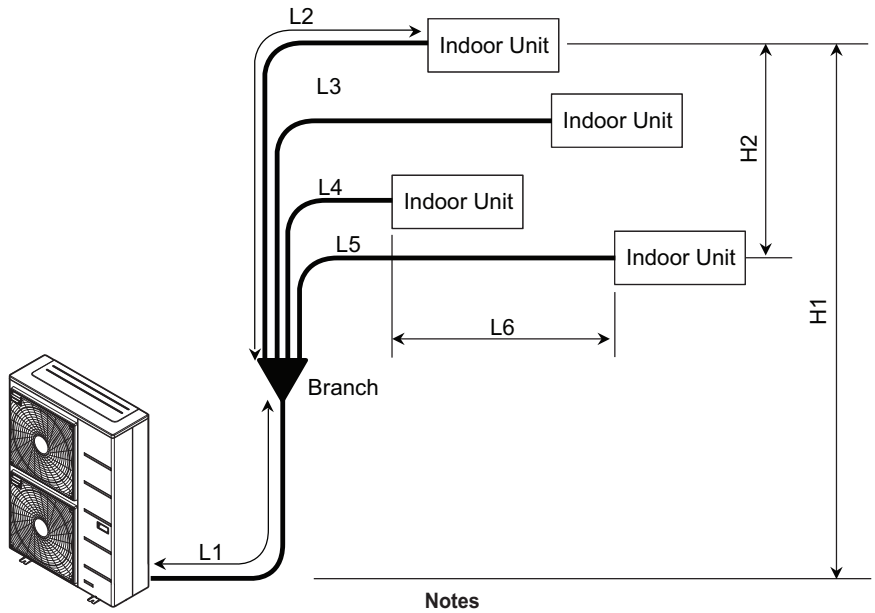

Notes

L1 (m)	: Main Piping Length (Outdoor Unit ~ Branching Kit)
L2~L5 (m)	: Branch Piping Length (Branching Kit ~ Indoor Unit)
L6 (m)	: Length Difference (the Nearest Indoor Unit ~ the farthest Indoor Unit)
H1 (m)	: Height Difference (Outdoor Unit ~ Indoor Unit)
H2 (m)	: Height Difference (Indoor Unit ~ Indoor Unit)

❊ Refer to the specifications of Outdoor Unit for Maximum limit.

- When installing the branch pipe, direction and angle of installation is not limited.
- Take care so that burrs and foreign material may not enter into the cutting surface when connecting.
- Connect remaining those by cutting or direct insertion to the diameter of pipe.

■ Refrigerant additional charge calculation method

Liquid Pipe Diameter (mm)	b (g/m)
Ø 6.35	35
Ø 9.52	40

Additional Refrigerant = (L1 - A) x a + (L2 + L3 + L4 + L5) x b

L1 (m) : Installed Branch Piping Length (Outdoor Unit ~ Branching Kit)

L2~L5 (m) : Installed Branch Piping Length (Branching Kit ~ Indoor Unit)

a (g/m) : Additional charging volume for Main Pipe (Outdoor Unit ~ Branching Kit)

b (g/m) : Additional charging volume for Branch Pipe (Branching Kit ~ Indoor Unit)

* Refer to the specifications for detail information of A, a.
* If total additional charge value after calculation comes out to be negative, then do not consider additional charge.

⚠ CAUTION

- Capacity is based on standard length and maximum allowance length is on the basis of reliability.
- Improper refrigerant charge may result in abnormal cycle.

4. Refrigerant piping system

◆ Multiple Piping type

⚠ CAUTION

- Please check the product type. Piping installation and refrigerant charge varies depending on the type of product.
  For more information, please refer to the installation manual.

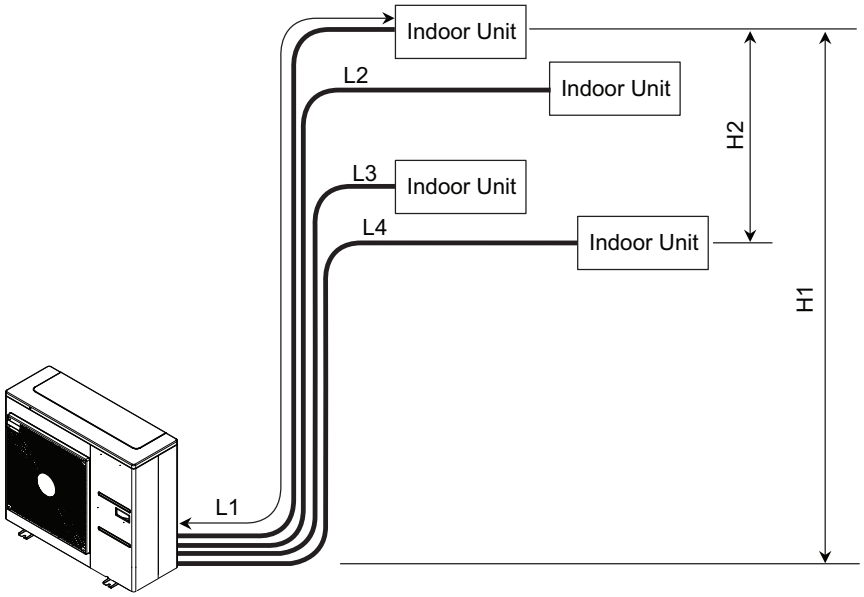

Notes
L1~L4 (m) : Piping Length (Outdoor Unit ~ Indoor Unit)
H1 (m) : Height Difference (Outdoor Unit ~ Indoor Unit)
H2 (m) : Height Difference (Indoor Unit ~ Indoor Unit)
❊ Refer to the specifications of Outdoor Unit for Maximum limit.

■ Refrigerant additional charge calculation method

Additional charge (g) = [(L1 + L2 + L3 + L4) – (A x CF1)] x a – (CF2 x 150)

L1~L4 (m) : Installed Piping Length (Outdoor Unit ~ Indoor Unit)

A (m) : Charge-less piping length

a (g/m) : Additional charging volume for Main Pipe (Outdoor Unit ~ Indoor Unit)

CF1 : Total number of connected indoor unit ÷ Max. number of connectable indoor unit

CF2 : Max. number of connectable indoor unit – Total number of connected indoor unit

* Refer to the specifications for detail information of A, a.
* If total additional charge value after calculation comes out to be negative, then do not consider additional charge.

⚠ CAUTION

- Capacity is based on standard length and maximum allowance length is on the basis of reliability.
- Improper refrigerant charge may result in abnormal cycle.

4. Refrigerant piping system

◆ Multi -Distributor Box type

⚠ CAUTION

- Please check the product type. Piping installation and refrigerant charge varies depending on the type of product. For more information, please refer to the installation manual.

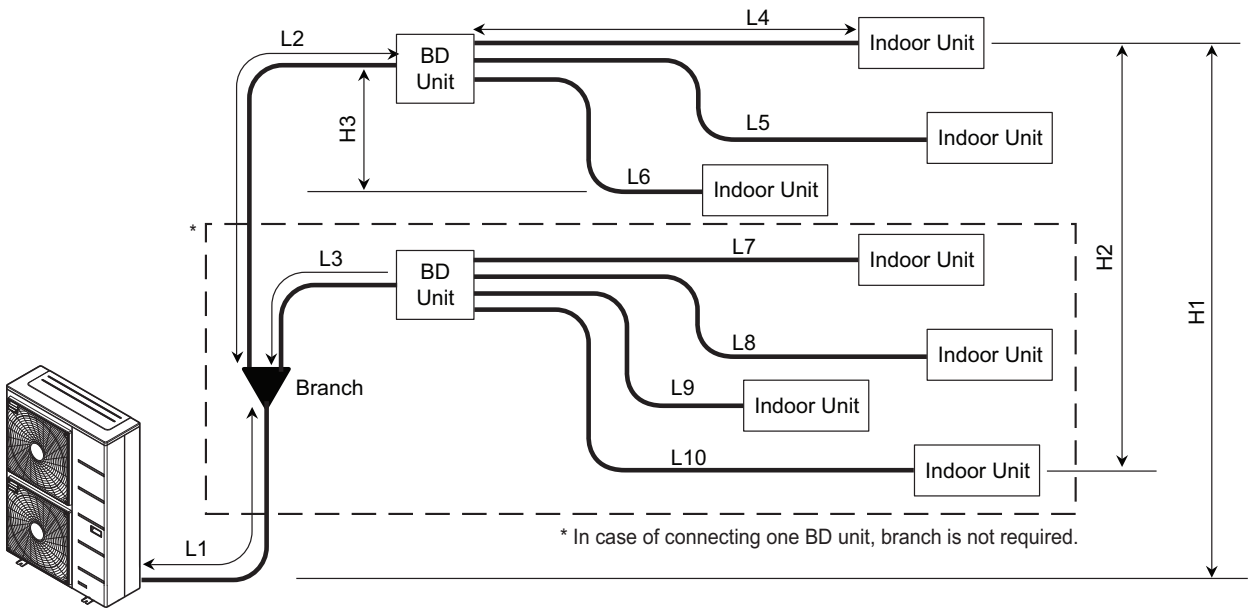

Notes

L1~L3 (m) : Main Piping Length (Outdoor Unit ~ BD Unit)

L4~L10 (m) : Branch Piping Length (BD Unit ~ Indoor Unit)

H1 (m) : Height Difference (Outdoor Unit ~ Indoor Unit)

H2 (m) : Height Difference (Indoor Unit ~ Indoor Unit)

H3 (m) : Height Difference (BD Unit ~ Indoor Unit)

❊ Refer to the specifications of Outdoor Unit for Maximum limit .

Piping Connection Size for BD Unit

Piping type	Outdoor Unit ~ BD Unit	BD Unit ~ Indoor Unit
	L1, L2, L3	L4~L10
Liquid pipe	Adjust to outdoor unit's piping size	Adjust to indoor unit's piping size
Gas Pipe		

■ Refrigerant additional charge calculation method

Additional charge (g) = [(L1 + L2 + L3) - A] x a + [(L4 + L5 + … + L10) – (B x CF1)] x b – (CF2 x 100)

L1~L3 (m) : Installed Main Piping Length (Outdoor Unit ~ BD Unit)

L4~L10 (m) : Installed Branch Piping Length (BD Unit ~ Indoor Unit)

A (m) : Charge-less Main piping length (Outdoor Unit ~ Indoor Unit)

B (m) : Charge-less Branch piping length (BD Unit ~ Indoor Unit)

a (g/m) : Additional charging volume for Main Pipe (Outdoor Unit ~ BD Unit)

b (g/m) : Additional charging volume for Branch Pipe (BD Unit ~ Indoor Unit)

CF1 : Total number of connected indoor unit ÷ Max. number of connectable indoor unit

CF2 : Max. number of connectable indoor unit – Total number of connected indoor unit

* Refer to the specifications for detail information of A, B, a, b.

* If total additional charge value after calculation comes out to be negative, then do not consider additional charge.

⚠ CAUTION

- Capacity is based on standard length and maximum allowance length is on the basis of reliability.
- Improper refrigerant charge may result in abnormal cycle.

5. Installation guide at the seaside

⚠ CAUTION

1. **Air conditioners should not be installed in areas where corrosive gases, such as acid or alkaline gas, are produced.**
2. **Do not install the product where it could be exposed to sea wind (salty wind) directly. It can result corrosion on the product. Corrosion, particularly on the condenser and evaporator fins, could cause product malfunctionor inefficient performance.**
3. **If outdoor unit is installed close to the seaside, it should avoid direct exposure to the sea wind. Otherwise itneeds additional anticorrosion treatment on the heat exchanger.**

◆ Selecting the location(Outdoor Unit)

1. If the outdoor unit is to be installed close to the seaside, direct exposure to the sea wind should be avoided. Install the outdoor unit on the opposite side of the sea wind direction.

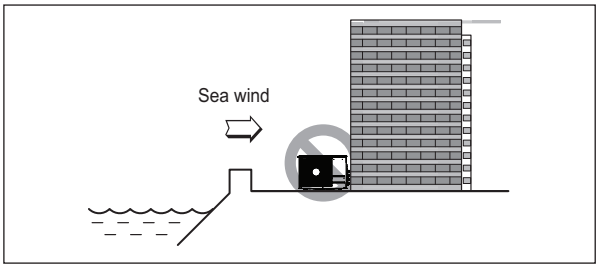

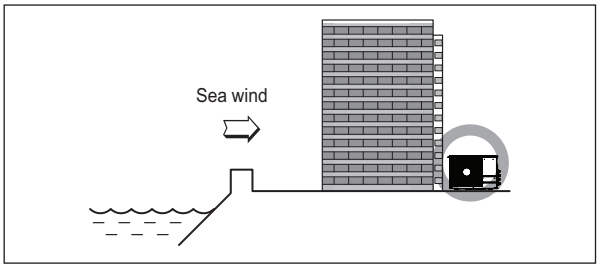

2. In case, to install the outdoor unit on the seaside, set up a windbreak not to be exposed to the sea wind.

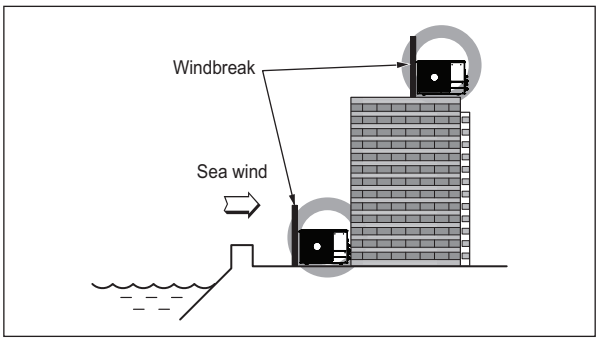

- It should be strong enough like concrete to prevent the sea wind from the sea.
- The height and width should be more than 150% of the outdoor unit.
- It should be kept more than 70 cm of space between outdoor unit and the windbreak for easy air flow.

3. Select a well-drained place.

Note

Periodic (more than once/year) cleaning of the dust or salt particles stuck on the heat exchanger by using water

6. Seasonal wind and cautions in winter

- Sufficient measures are required in a snow area or severe cold area in winter so that product can be operated well.
- Get ready for seasonal wind or snow in winter even in other areas.
- Install a suction and discharge duct not to let in snow or rain.
- Install the outdoor unit not to come in contact with snow directly. If snow piles up and freezes on the air suction hole, the system may malfunction. If it is installed at snowy area, attach the hood to the system.
- Install the outdoor unit at the higher installation console by 50cm than the average snowfall (annual average snowfall) if it is installed at the area with much snowfall.
- Where snow accumulated on the upper part of the Outdoor Unit by more than 10cm, always remove snow for operation.

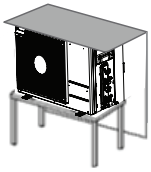

Note

1. The height of H frame must be more than 2 times the snowfall and its width shall not exceed the width of the product. (If width of the frame is wider than that of the product, snow may accumulate)
2. Don't install the suction hole and discharge hole of the Outdoor Unit facing the seasonal wind.

LG
Life's Good

LG Electronics

Air Conditioner
20 Yeouido-dong, Yeongdeungpo-gu,
Yeouido P.O.Box 335 Seoul,
150-721, Korea.
http://www.lgeaircon.com

All rights reserved
Printed in Korea July / 2016
The specifications, designs, and information in this brochure are subject to change without notice.

The air conditioners manufactured by LG have received ISO9001 certificate for quality assurance and ISO14001 certificate for environmental management system.